READ THIS MANUAL CAREFULLY!

# OWNER'S MANUAL

We believe you have the opportunity to enjoy the riding experience. We've provided this owner's manual to assist you in learning about safe operation and care of your new ATV.

*An ATV is not a toy and can be hazardous to operate. Make sure any child who will operate the ATV takes a training course before operating the ATV. Make sure all operators understand and follow all of the instructions and warnings contained in this owner's manual.*

*Never allow a child under the age of 16 to operate an ATV without adult supervision.*

Children differ in skills, physical abilities and judgment. Some children may not be able to operate an ATV safely. Permit continued use only if you determine that your child has the ability and maturity to operate the ATV safely.

*For your child's safety, be sure your child can reach and operate all ATV controls, including handlebars, brake levers, throttle lever and engine stop switch.*

The preventive maintenance program outlined in this manual is designed to ensure that all critical components on your child's ATV are thoroughly inspected at specific intervals.

Follow all of the instructions and recommendations in this manual.

Before you ride your new ATV, there are some important things that you need to know. You must learn how to keep yourself and those around you safe while you're riding. Your parents and want you to enjoy riding your new ATV, and that's why you need to read and understand the information in your owner's manual.

You must also take an ATV training course before you begin riding.

Ask your parents to explain anything you don't understand, and pay close attention to the warnings and instructions you read. Your safety and the safety of others is the most important thing to think about at all times. Never drive your ATV alone. Always make sure an adult is watching you when you ride. Drive safely and enjoy riding your new ATV!

# Table of Contents

Introduction..... 5
Safety..... 7
Know Your ATV..... 31
Pre-Ride Check..... 38
Riding Rules ..... 41
Engine and Vehicle Identification Number Location..... 45
Features and Controls ..... 46
Operation..... 55
Emission Control Systems..... 77
Maintenance ..... 78
Warranty..... 122
Specifications..... 125
Troubleshooting..... 127

# Introduction

## Safety Words and Symbols

The following signal words and symbols appear throughout this manual and on your vehicle.Your safety is involved when these words and symbols are used. Become familiar with their meanings before reading the manual.

⚠

The safety alert symbol indicates a potential personal injury hazard.

**DANGER**

A DANGER indicates a hazardous situation that, if not avoided, will result in death or serious injury.

**WARNING**

A WARNING indicates a hazardous situation which, if not avoided, could result in death or serious injury.

**CAUTION**

A CAUTION indicates a hazardous situation which, if not avoided, could result in minor or moderate injury.

**NOTICE**

A NOTICE indicates a situation that could result in property damage.

The Prohibition Safety Sign indicates an action that NOT to take in order to avoid a hazard.

The Mandatory Action Sign indicates an action that NEEDS to be taken to avoid a hazard.

## ⚠WARNING

Failure to follow the warnings and safety precautions contained in this manual can result in severe injury or death. AN ATV is not a toy and can be hazardous to operate. This vehicle handles differently than other vehicles, such as motorcycles and cars. A collision or rollover can occur quickly, even during routine maneuvers like turning, or driving on hills or over obstacles, if you fail to take proper precautions.

• Read this owner's manual. Understand all safety warnings, precautions and operating procedures before operating an ATV.

Keep this manual with the ATV.

• Never operate an ATV without proper instruction. Take a training course.

• For your child's safety, be sure your child can reach and operate all ATV controls, including handlebars, brake levers, throttle lever and engine stop switch.

• Always follow the age guidelines for your vehicle. U-38 models are designed for people not less than 16 years of age .
No child under the age of 16 should ride any ATV designed and sold for an adult.

• Never permit a guest to operate the ATV unless the guest has read this manual and all product labels and has completed a certified safety training course.

# Safety

## Riding Gear

Always wear clothing suited to the type of riding. ATV riding requires special protective clothing for comfort and to reduce the chance of injury.

## Helmets and eye protection

Your helmet is your most important piece of driving gear because it offers the best protection against head injuries. A helmet should fit your head comfortably and securely.

An open-face helmet offers some protection, but a full-face helmet is recommended. Regardless of the style, look for a DOT (Department of Transportation) sticker in any helmet you buy. Always wear a face shield or goggles to protect your eyes and help your vision.

### Gloves

Off-road style gloves with knuckle pads are the best for comfort and protection.

### Boots

The best footwear is a pair of strong over-the-ankle boots with low heels.

### Clothing

Always wear long sleeves and long pants to protect arms and legs. Riding pants with kneepads and a jersey with shoulder pads provide the best protection.

## Drive training

Developing your driving skills is an on-going process. Even if you have driven another ATV, take time to become familiar with this ATV in a safe area to build your skills. Do not drive in rough terrain until you get familiar with this ATV controls, and feel comfortable with its size and weight.

## Safety Warnings

### Operating Without Instruction

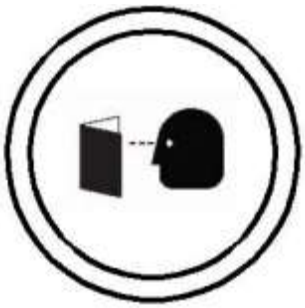

Operating this ATV without proper instruction increases the risk of an accident. The operator must understand how to operate the ATV properly in different situations and on different types of terrain.

Beginning and inexperienced operators should complete an ATV training course. They should then regularly practice the skills learned in the course and the operating techniques described in the Owner's Manual.

Never permit a guest to operate the ATV unless the guest has read this manual and all product labels and has completed a certified safety training course.

**WARNING**

Failure to operate the ATV properly can result in a collision, loss of control, accident or overturn, which may result in serious injury or death.

Be sure to read all of the following warnings about driving hazards and how to avoid them. These warnings are provided for your child's safety. Be sure to explain to your young driver that the hazards outlined in this section of the owner's manual must be avoided at all times. See the RIDING RULES section and the OPERATION section of the owner's manual for proper operating procedures.

**Operator Restrictions/Age Restrictions**

This vehicle is for recreational use by young operators under adult supervision ONLY.

Operation is prohibited for anyone under age 16.

### Handling Gasoline

Gasoline is highly flammable and explosive under certain conditions.

• Never allow a child to refuel or handle gasoline.

• Always exercise extreme caution whenever handling gasoline.

• Always refuel with the engine stopped, and outdoors or in a well ventilated area.

• Do not smoke or allow open flames or sparks in or near the area where refueling is performed or where gasoline is stored.

• Do not overfill the tank. Do not fill the tank neck.

• If gasoline spills on your skin or clothing, immediately wash it off with soap and water and change clothing.

### Exposure to Exhaust

Engine exhaust fumes are poisonous and can cause loss of consciousness or death in a short time. Never start the engine or let it run in an enclosed area.

Operate this vehicle only outdoors or in well-ventilated areas.

**Failure to Inspect Before Operating**

Failure to inspect and verify that the ATV is in safe operating condition before operating increases the risk of an accident. Always inspect the ATV before each use to make sure it's in safe operating condition. Always follow all inspection and maintenance procedures and schedules described in the owner's manual.

**Protective Apparel**

Operating this ATV without wearing an approved helmet increases the risk of a serious head injury in the event of an accident.

Operating without eye protection could result in an accident and could increase the chance of a serious injury in the event of an accident.

Always wear an approved helmet that fits properly. Always wear eye protection (goggles or face shield), gloves, boots, a long-sleeved shirt or jacket and long pants.

### Carrying a Passenger

Carrying a passenger greatly reduces the operator's ability to balance and control the ATV, which may result in an accident or overturn.

Never carry a passenger on this ATV.

### Using Alcohol or Drugs

Operating the ATV after consuming alcohol or drugs could adversely affect operator judgment, reaction time, balance and perception. Never consume alcohol or drugs before or while operating an ATV.

**Operating on Pavement**

Operating an ATV on paved surfaces (including sidewalks, paths, parking lots and driveways) may adversely affect the handling of the ATV and could result in loss of control and accident or overturn. Avoid operating the ATV on pavement. ATV tires are designed for off-road use. If it's unavoidable, travel slowly and avoid sudden turns or stops.

**Operating on Public Roads**

Operating this ATV on public streets, roads or highways could result in a collision with another vehicle. Never operate the ATV on any public street, road or highway, including dirt and gravel roads. In many states it's unlawful to operate ATVs on public streets, roads and highways.

### Operating at Excessive Speeds

Operating the ATV at excessive speeds increases the operator's risk of losing control. Always operate at a speed that's appropriate for the terrain, the visibility and operating conditions, and your experience.

### Physical Control of the ATV

Removing a hand from the handlebars or feet from the footrests during operation can reduce your ability to control the vehicle or cause loss of balance and ejection from the ATV. If the operator's foot is not firmly planted on the footrest, it could also contact the rear wheels. Never remove your hands from the handlebars while operating, and always keep both feet on the footrests.

**Jumps and Stunts**

Attempting wheelies, jumps and other stunts increases the risk of an accident or overturn. Never attempt wheelies, jumps, or other stunts. Avoid exhibition driving.

**Turning Improperly**

Turning improperly could cause loss of traction, loss of control, accident or overturn. Always follow proper procedures for turning as described in the owner's manual.

Never turn abruptly or at sharp angles. Never turn at high speeds. Practice turning at slow speeds before attempting to turn at faster speeds.

**Operating on Steep Hills**

Operating on excessively steep hills could cause an overturn. Never operate on hills too steep for the ATV or for your abilities. Never operate the ATV on hills steeper than 15 degrees.

**Improper Hill Climbing**

Improper hill climbing could cause loss of control or overturn. Always follow proper procedures for climbing hills as described in the owner's manual.

**Descending Hills Improperly**

Improperly descending a hill could cause loss of control or overturn.

• Always follow proper procedures for traveling down hills as described in the owner's manual.

**NOTE:** A special technique is required when braking while traveling downhill.

• Always check the terrain carefully before descending a hill.

• Shift your weight rearward.

• Never travel down a hill at high speed.

• Avoid traveling down a hill at an angle, which would cause the vehicle to lean sharply to one side. Travel straight down the hill when possible.

**Crossing Hillsides**

Driving on a sidehill is not recommended. Improper procedure could cause loss of control or overturn. Avoid crossing the side of any hill unless absolutely necessary.

If crossing a hillside is unavoidable, always follow proper procedures as described in the owner's manual. See page 67,page 68

Never attempt to turn the ATV around on any hill until you've mastered the turning technique (on level ground) as described in the owner's manual. See page 69.

**Stalling While Climbing a Hill**

Stalling, rolling backwards or improperly dismounting while climbing a hill could cause an overturn.

Always maintain a steady speed when climbing a hill.

If all forward speed is lost

If you lose all forward speed: Keep your weight uphill. Apply the front brakes gradually (right lever). When fully stopped, apply the rear brake as well (right foot brake) and then lock the parking brak

*If the ATV begins rolling downhill:* Keep weight uphill. Never apply engine power. Never apply the rear brake while rolling backwards. Apply the front brake slowly. When fully stopped, apply rear brake as well, and then lock the parking brake.

Dismount on uphill side, or to either side if pointed straight uphill. Turn the ATV around and remount, following the procedure described in the Owner's Manual. See page 71.

### Operating on Slippery Terrain

Failure to use extra caution when operating on excessively rough, slippery or loose terrain could cause loss of traction, loss of control, accident or overturn.

Do not operate on excessively rough, slippery or loose terrain until you've learned and practiced the skills necessary to control the ATV on such terrain.

Always use extra caution on rough, slippery or loose terrain.

### Operating in Unfamiliar Terrain

Failure to use extra caution when operating on unfamiliar terrain could result in an accident or overturn. Unfamiliar terrain may contain hidden rocks, bumps, or holes that could cause loss of control or overturn.

Travel slowly and use extra caution when operating on unfamiliar terrain. Always be alert to changing terrain conditions.

### Improper Tire Maintenance

Operating this ATV with improper tires or with improper or uneven tire pressure could cause loss of control or accident.

Always use the size and type of tires specified for your ATV. Always maintain proper tire pressure as described in the owner's manual and on safety labels.

### Operating Improperly in Reverse

Improperly operating in reverse could result in a collision with an obstacle or person. Always follow proper operating procedures as outlined in this manual. See page 65.

Before shifting into reverse gear, always check for obstacles or people behind the ATV. When it's safe to proceed, back slowly.

### Improper Vehicle Modifications

Improper installation of accessories or modification of the ATV may cause changes in handling, which could cause loss of control or an accident.

Never modify the ATV through improper installation or use of accessories.

Your dealer can assist if necessary.

### Operating Over Obstacles

Improperly operating over obstacles could cause loss of control or overturn.

Before operating in a new area, check for obstacles. Avoid operating over large obstacles such as rocks and fallen trees. If unavoidable, use extreme caution and always follow proper operating procedures as outlined in this manual.

### Skidding or Sliding

Skidding or sliding can cause loss of control or overturn (if tires regain traction unexpectedly). On slippery surfaces such as ice, travel slowly and use extra caution to reduce the chance of skidding or sliding.

**Operating Through Deep Water**

Operating the ATV through deep or fast-flowing water could cause the tires to float, causing loss of control or overturn. Avoid operating through deep or fast-flowing water. If it's unavoidable to enter water that exceeds the height of the footrests:

• Travel slowly.

• Balance your weight carefully.

• Avoid sudden movements.

• Maintain a slow and steady forward motion. Do not make sudden turns or stops, and do not make sudden throttle changes.

• brakes may have reduced stopping ability. After leaving water, test the brakes. Apply them lightly several times while driving. The friction will help dry out the pads.

### Improper Cargo Loading

Overloading the ATV or carrying/towing cargo may cause changes in handling, which could cause loss of control or an accident. Never haul cargo or tow a load with this ATV.

Never tow or pull an object behind the ATV. A wagon, sled or other towed object does not have brakes or steering.

The object may overturn or collide with other objects.

Never exceed the stated load capacity for this ATV.

### Operating on Frozen Bodies of Water

Operating on frozen bodies of water may result in serious injury or death if the ATV and/or the operator fall through the ice. Never operate the ATV on a frozen body of water.

### Operating a Damaged ATV

Operating a damaged ATV can result in an accident. After any overturn or accident, have a qualified service dealer inspect the entire machine for possible damage, including (but not limited to) brakes, throttle and steering systems.

### Unauthorized Use of the ATV

Leaving the keys in the ignition can lead to unauthorized use of the vehicle, which could result in an accident or overturn. Always remove the ignition key when the vehicle is not in use.

### Physical Skills

Safe operation of this rider-active vehicle requires good judgement and physical skills. Persons with cognitive or physical disabilities who operate this vehicle have an increased risk of overturn and loss of control.

### Hot Exhaust Systems

Exhaust system components are very hot during and after use of the vehicle. Hot components can cause burns and fire. Do not touch hot exhaust system components. Always keep combustible materials away from the exhaust system.

Use caution when traveling through tall grass, especially dry grass. Always inspect the underside of the ATV after driving through tall grass, weeds, brush and other tall ground cover. Promptly remove any grass or debris clinging to the vehicle.

## Safety Labels

Warning labels have been placed on the vehicle for your protection. Read and follow the instructions on each label carefully. If any of the labels shown in this manual differ from the labels on your vehicle, always read and follow the instructions of the labels on the vehicle.

If an informational or graphic label becomes illegible or comes off, contact your dealer to purchase a replacement.

### Age Warning

WARNING

Operation of this ATV by children under age 16 increases the risk of severe injury or death.

NEVER permit children under age 16 to operate this ATV.

**Operation Warning**

WARNING

Improper ATV use can result in SEVERE INJURY OR DEATH. Always use an approved helmet and protective gear. Never use on public roads. Never carry passengers. Never use with drugs or alcohol.

**NEVER** operate: without proper training or instruction; at speeds too fast for your skills or the conditions; on public roads - a collision can occur with another vehicle; with a passenger - passengers affect balance and steering and increase risk of losing control.

**ALWAYS:** use proper riding techniques to avoid vehicle overturns on hills and rough terrain and in turns; avoid paved surfaces - pavement may seriously affect handling and control.

LOCATE AND READ OWNER'S MANUAL. FOLLOW ALL INSTRUCTIONS AND WARNINGS.

## Tire Pressure Warning

WARNING

Improper tire pressure or overloading can cause loss of control.

Loss of control can result in severe injury or death.

OPERATING TIRE PRESSURE: Set with tires cold

- Recommended: Front: 35.0kPa(5.0psi)
  Rear: 35.0kPa(5.0psi)
- Minimum : Front: 32.0kPa(3.0psi)
  Rear: 32.0kPa(3.0psi)
- Never set tire pressure below minimum.
  It could cause the tire to dislodge from the rim.

LOADING.

- Maximum weight capaerty:100kg(220lbs.)
  Includes weight of operator,cargo and accessories.

**No Passenger Warning**

WARNING

NEVER ride as a passenger.

Passengers can cause a loss of control, resulting in SEVERE INJURY or DEATH.

# Know Your ATV

These units are not designed for adult use. Serious damage to the vehicle may occur if the maximum rider weight capacity is exceeded. See the specifications section beginning on page 125 for your ATV's capacity.

**CHILDREN:** Before you ride your new ATV, there are some important things that you need to know. Your safety and the safety of others is the most important thing to think about at all times. As the driver of the ATV, you must learn how to keep yourself and those around you safe while you're riding.

Pay attention when you see this symbol:

This is the safety alert symbol. When you see this symbol on your ATV or in this manual it means PAY ATTENTION because you could die or be seriously injured if you don't follow the instructions.

Before you have an adult start the engine for you for the first time, let's learn about the controls on your new ATV.

1. **Engine start switch**- Press the button to start the engine.
2. **Throttle Control** - Press the throttle lever with your thumb when you want the ATV to go forward. Always make sure the throttle control does not stick before you drive your ATV.

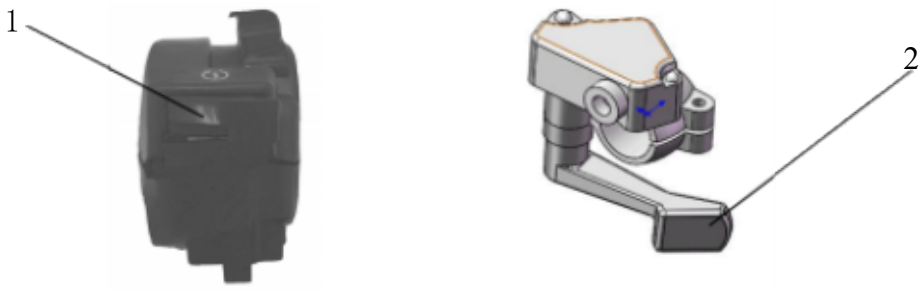

3. **Shift Lever -** The shift lever is on the right side of the ATV.

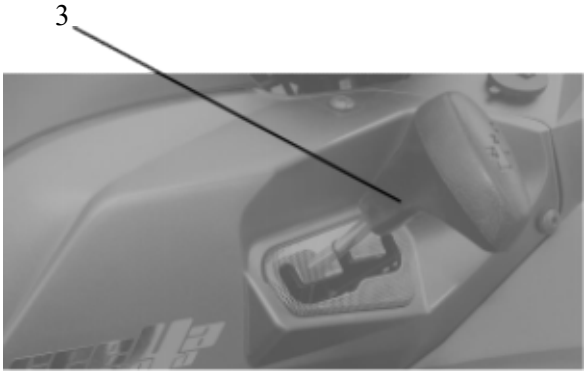

4. **Gas Cap** - The gas cap has to be taken off when an adult puts gas in your ATV.

Never take the gas cap off. Always make sure it's tightly closed.

Always have an adult put gas in your ATV. Never try to do it yourself.

5. **Seat** - Pull the seat up and away, replace the seat, place it in place, and lower the seat. Always make sure the seat is in place before riding.

6. **Brake** - Squeeze the brake levers toward the handlebar to slow down or stop the ATV. The right lever controls the front brake. The right foot brake controls the rear brake.

Always squeeze both brakes at the same time.

Always squeeze both brakes at the same time or you could lose control of the ATV and be seriously injured. Always take your thumb off the throttle lever when you squeeze The brakes.

6 Front Brake

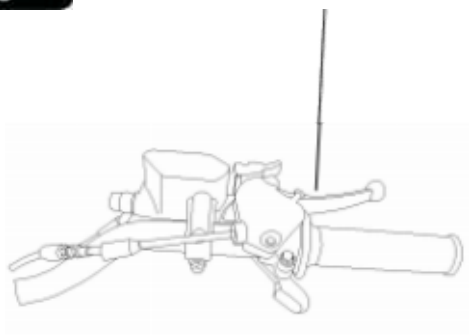

7. **Start Button -** Use this button to start the engine when you're ready to drive.
8. **Ignition Switch** - The ignition switch key must be turned on before pushing the start

button. You can also use this key to turn off the engine.

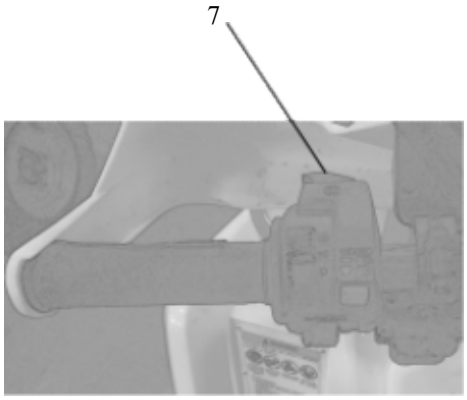


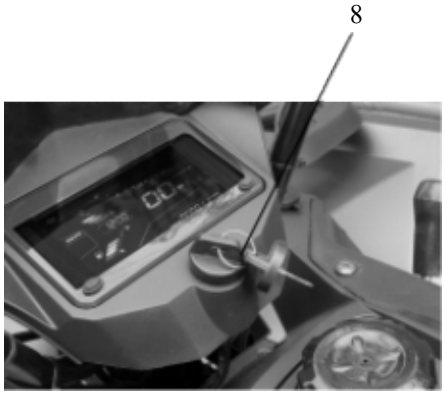

**Let's review the one way to stop the engine of your ATV:**

1. Turn the key off.

## Pre-Ride Check

We’re almost ready to have an adult start your ATV. But before the ATV is started for the first time, you must do a Pre-Ride Check. In fact, every time you want to ride you must have an adult help you check some things on your ATV before starting it. Let’s learn about these things now.

1. Make sure the throttle doesn’t stick. Check this by pushing the throttle lever toward the handlebar and then letting go. The lever should come right back to where it was before you pushed it. If it comes back slowly or stays close to the handlebar, the ATV has a sticky throttle. This means that something is wrong or broken and must be fixed before you can ride your ATV safely.

Never start the engine if you have a sticky throttle. You could be seriously hurt if you ride with a sticky throttle. Have an adult or your dealer fix the throttle before you ride.

2. Make sure the brakes don’t stick. Press the brake lever towards the handlebar and step on the foot brake, then release it and check the brake lever.They should come right back to where they were before you squeezed.

If they go back slowly or stay close to the handlebar, your ATV has sticky brakes. They must be fixed before you can ride your ATV safely.

Never start the engine if your ATV has sticky brakes. You could be seriously hurt if you ride with sticky brakes. Have an adult or your dealer fix the sticky brakes before you ride.

3. Have an adult check to see if your ATV needs more gas. Children must never add their own gasoline. This must always be done by an adult. Before anyone adds gasoline to your ATV they must read the instructions and warnings.

Always have an adult put gas in your ATV. Never try to do it yourself.

4. Make sure the seat is locked in place.
5. Have an adult check the engine oil level when the engine is cold. The engine is very hot after it has been

running and it can burn your skin if you touch it. Children must never check the oil on their own. An adult should always be in charge of keeping the gas and oil levels at the full marks.

6. This last check is done with the engine running. You must check to make sure that the way to stop the engine of your ATV are working the way they should. Do you remember what it is? If you can't remember the way to stop the engine, go back and review. Then have an adult help you start the engine. Practice stopping the engine that way.

## Riding Rules

Now you're ready to learn about riding your ATV. There are some things you can do and there are some things

you must never do. Rules are very important when you're driving an ATV. Adults have riding rules, too. The rules help keep us safe when we ride.

➡ The adult with you is your teacher. Always pay attention to what your teacher says so you can learn how to always drive safely.

Let's learn how to ride!

Always follow the safe riding rules found on the next pages. You or others around you could be seriously hurt if you don't follow the safe riding rules.

➡ Always wear the right kind of clothing and safety gear when riding your ATV.

**Helmet:** Your helmet is very important for safe riding. A helmet can prevent a severe head injury.

**Eye Protection:** Always wear shatterproof goggles or a helmet face shield, and always keep them clean so you can see where you're driving.

**Gloves:** Wear gloves to protect your hands from sun and wind. Gloves will also protect your hands from scrapes and scratches.

**Boots:** Wear sturdy over-the-ankle boots to keep your feet dry. Boots will also protect your feet and ankles from scrapes and scratches.

**Clothing:** Make sure your clothing fits properly. If it's too small, it could keep you from moving easily when you shift your weight. If it's too big, it could hang down and get caught in a moving part. Wear long sleeves and long pants to protect your arms and legs.

➡ Make sure you know where you're going to drive before your ATV is started. Make sure the area is safe all around your ATV.

- Your ATV is made for one person. Never carry a passenger. A passenger will make the ATV harder to drive. You may lose control and hurt yourself and your passenger.
- Always drive your ATV while sitting down. Keep both hands on the handlebars and keep both feet on the footrests.
- Always be alert and pay attention to where you're driving. Pay attention to other drivers, and be even more careful around them because you don't know what they're going to do.
- Never follow another ATV too closely. You need lots of time and space to stop your ATV.
- Never tow or pull an object behind the ATV.
- Never ride alone. An adult should always be watching you in case you need help. Always drive within the sight of an adult.
- Never ride on public trails.
- Don't ride your ATV on roads or over railroad tracks. Your ATV makes noise that will keep you from hearing cars, trucks or trains that may be coming towards you.
- Learn where there are lakes, rivers, ponds and ditches in your driving area. Stay away from them.
- Never ride on frozen water. You could get hurt or you could even die. All ice can be dangerous!

- Ride your ATV only where you know it is safe to drive and where you have permission to drive. Be careful of the things around you.
- Always be a polite driver. (Don’t drive through the flower garden or over the little trees you planted!)
- Always do your best to help take care of nature.

## Engine and Vehicle Identification Number Location

1

2

**TYPICAL**

1. VIN (Vehicle Identification Number)
2. EIN (Engine Identification Number)

# Features and Controls

## Main Key Switch

Turn the key clockwise to the ON position before starting the engine. To avoid draining the battery, always turn the key to the OFF position when the engine is not running. Always remove the ignition key when the vehicle is not in use.

## Light Switch

When the light is off, the switch is at the bottom, and the upward one is small light and headlight.

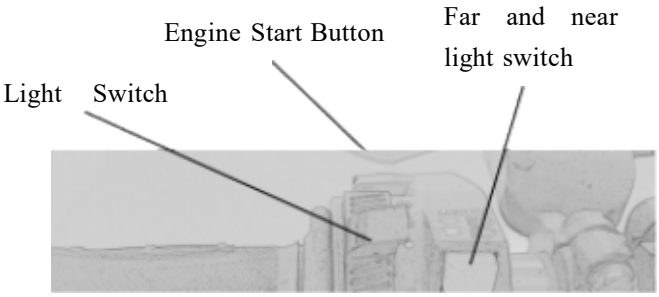

## Horn

Honking your horn while driving will alert others around you.

## Cornering Lamp

Swipe left and right to remind people around you where you are going.

## Traction Switch

Pressing the pull cable in the "out" direction will pop up, and pressing the pull cable in the "in" direction will pull back.

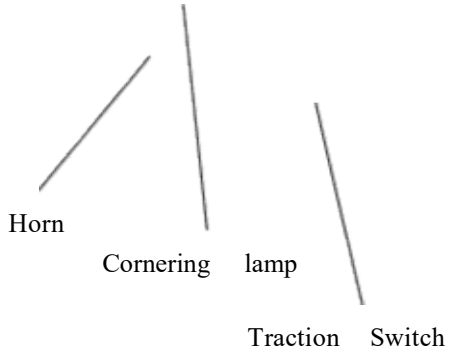


## Far and near light switch

Use the far and near light switch to illuminate the way forward at night.

## Engine Start Button

The start button is located on the left handlebar control.

Follow the *Starting the Engine* procedure beginning on page 61.

## Throttle Controls

**WARNING**

Operating an ATV with sticking or improperly operating throttle controls could cause an accident and

lead to severe injury or death.

Never start or operate an ATV with a sticking or improperly operating throttle. Always contact your dealer or other qualified person for service if throttle problems arise.

Failure to check or maintain proper operation of the throttle system can result in an accident if the throttle lever sticks during operation. Always check the lever for free movement and return before starting the engine. Also check occasionally during operation.

The throttle release switch limits engine speed in the event of a throttle system malfunction.

Modifications to the throttle release switch could result in failure to perform as designed, which could result in an accident. Do not attempt to modify the throttle control system or replace it with any after market throttle mechanism. Always ensure that the throttle cable is installed and properly routed to the throttle control.

## Throttle Lever

Press the throttle lever toward the handlebar to increase engine speed and vehicle movement. Engine speed returns to idle when the lever is released.

**NOTE:** Idle RPM is preset by the manufacturer. If the engine idle speed is not satisfactory, please see your dealer or other qualified service facility for adjustment.

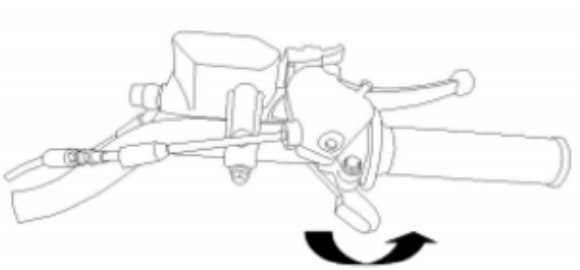

## Shift Lever

To change gears, stop the ATV. With the engine idling, move the lever to the desired gear. Do not

try to shift gears with engine speed above idle or while the ATV is moving.

Maintaining shift linkage adjustment is important to assure proper transmission function. See your dealer or other qualified person if you experience any shifting problems.

Shift Lever

**Shift Pattern**

F: Forward Gear

N: Neutral

R: Reverse

**NOTICE:** Do not attempt to shift the transmission while the vehicle is moving or damage to the transmission could result. Always shift when the vehicle is stationary and the engine is at idle.

## Brakes

At the same time, press the rotating rod and step on the foot brake to realize the brake. The right control lever controls the front brake, and the right foot brake controls the rear brake.

**WARNING!** Applying only one brake could cause loss of control and result in serious injury or death. Always apply both brakes at the same time.

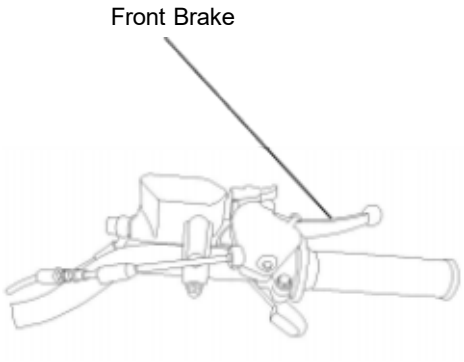


**Parking Brake**

1. Squeeze the right brake lever.
2. Push the parking brake lock back to lock

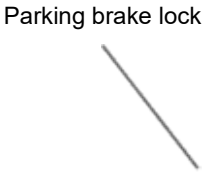

the brake lever in place.

3. Release the brake lever.

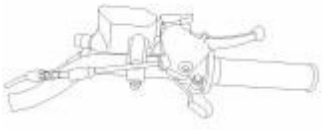

4. To release the parking brake lock, squeeze and release the brake lever. The parking brake will release automatically.

5. Always lock the parking brake whenever the vehicle is left unattended.

**WARNING!** Operating the ATV while the parking brake is engaged could cause an accident resulting in serious injury or death. It could also result in driveline or engine damage. Always be sure to disengage the parking brake before operating the ATV.

## Lights

Youth ATVs have a meter equipped with high and low beam that are designed for driving in the dark. Reduce speeds in conditions of reduced visibility.

This ATV is designed for off-road use only. Do not operate this ATV on streets or highways.

**Indicator Lights**

| Indicator | Description |
|---|---|
| Neutral | Transmission is in neutral. |
| High Beam | The lamp is in high light. |
| Left Turn | The signal is on the left. |
| Right Turn | The signal is on the right. |
| Forward Gear | Transmission is in Forward Gear . |
| Reverse | Transmission is in reverse. |

## Fuel System

### Gas Cap

The fuel tank filler cap is located directly below the handlebars.

Use unleaded gasoline with a minimum pump octane number of 90=(R+ M/2) octane. Non-ethanol fuel is recommended.

Gas Cap

***Do not use fuel with ethanol content greater than 10 percent, such as E-85 fuel.***

Refer to the specifications section beginning on page 125 for fuel tank capacity.

# Operation

**WARNING**

## Break-in Period

The break-in period for your new ATV is defined as the first ten hours of operation, or the time it takes to use the first two full tanks of gasoline. No single action on your part is as important as following the procedures for a proper break-in. Careful treatment of a new engine will result in more efficient performance and longer life for

the engine.

Perform the following procedures carefully.

**NOTICE:** Excessive heat build-up during the first three hours of operation will damage close-fitted engine parts. Do not operate at full throttle or high speeds for extended periods during the first three hours of use.

Mixing brands or using a non-recommended oil may cause serious engine damage. Always use the recommended oil. Never substitute or mix oil brands.

1. Fill the fuel tank with gasoline. Always exercise extreme caution whenever handling gasoline. See page 11.
2. Check the oil level. See page 84. Add the recommended oil as needed to maintain the oil level in the safe operating range.
3. Drive slowly at first. Select an open area that allows room to familiarize yourself with operation and handling.
4. Vary throttle positions. Do not operate at sustained idle.
5. Perform regular checks on fluid levels, controls and areas outlined on the daily pre-ride inspection checklist. See page 57.

## Pre-Ride Inspection

Failure to inspect and verify that the ATV is in safe operating condition before operating increases the risk of an accident. Always inspect the ATV before each use to make sure it's in safe operating condition.

| Pre-Ride Checklist | | |
|---|---|---|
| **Item** | **Remarks** | **Page** |

| | | |
|---|---|---|
| Front suspension | Inspect, lubricate if necessary | 81 |
| Steering | Ensure free operation, lubricate if necessary | 100, 102 |
| Tires | Check condition and pressure | 108 |
| Wheels / fasteners | Inspect, ensure fastener tightness; check that axle nuts are secured by cotter pins | 110 |
| Fuel and oil | Check and fill as needed | 11, 54 |

| Pre-Ride Checklist | | |
|---|---|---|
| **Item** | **Remarks** | **Page** |
| Throttle | Check for proper operation | 38, 48, 49 |
| Far and near light | Check for proper operation | 47 |
| Brakelight | Check for proper operation | -- |
| Air filter, pre-filter | Inspect, clean or replace | 105 |

| | | |
|---|---|---|
| Drive chain | Check condition and slack; refer to drive chain adjustment | 104 |
| Frame nuts, bolts, fasteners | Inspect, ensure tightness | -- |
| Loose or damaged components | Visually inspect for any damaged components or loose fasteners | -- |
| Riding gear | Wear helmet, goggles, protective clothing | 7 |

## Safe Operation Practices

1. Complete the recommended safety training before operating this vehicle.
2. Do not allow anyone under age 16 to operate this vehicle.
3. Never carry a passenger on this ATV.
4. Engine exhaust fumes are poisonous.Never start the engine or let it run in an enclosed area.
5. Operate this vehicle off-road only.

Never operate the vehicle on pavement or on any public street, road or highway,including dirt and gravel roads.

6. Never exceed the maximum weight capacity of the vehicle. When determining the weight you are adding to the vehicle, include the weight of the operator, accessories and loads on the racks. The combined weight of these items must not exceed the maximum weight capacity.
7. Drive in a manner appropriate for your skills and operating conditions. Never operate at excessive speeds. Never attempt wheelies, jumps, or other stunts.Never remove your hands from the handlebars while operating, and always keep both feet on the footrests.
8. Never consume alcohol or drugs before or while operating an ATV.
9. Always use the size and type of tires specified for your vehicle. Always maintain proper tire pressure.
10. Never operate a damaged ATV. After any overturn or accident, have a qualified service dealer inspect the entire machine for possible damage.
11. Never operate the ATV on a frozen body of water.
12. Do not touch hot exhaust system components. Always keep combustible materials away from the exhaust system.
13. Always remove the ignition key when the vehicle is not in use to prevent unauthorized use.

## Starting the Engine

**NOTICE:** Operating the ATV immediately after starting could cause engine damage. Allow the engine to warm up for several minutes before operating.

1. Shift the transmission to neutral.
2. Lock the parking brake.
3. Press the engine switch.

4. Turn the ignition key to ON.
5. Step on the rear foot brake and press the start button. The rear brakes must engage or the engine won't start.
6. Do not press the throttle while starting the engine. Activate the starter for a maximum of five seconds, releasing the button when the engine starts. If it doesn't start, release the starter, wait five seconds, then activate for another five seconds. Repeat until the engine starts.

## Stopping the Engine

1. Release the throttle completely.
2. Apply the brakes until the vehicle stops moving.
3. Shift the transmission to neutral.
4. Stop the engine. There is one way to stop the engine:
   • Turn the key off.

5. Lock the parking brake.
6. To avoid draining the battery, always turn the key to the OFF position when the engine is not running.

## Driving Procedure

1. Sit upright with both feet on the footrests and both hands on the handlebars.
2. Shift the transmission to neutral.
3. Start the engine and allow it to warm up.
4. Check your surroundings and determine your

path of travel.

5. Squeeze the right brake lever.
6. Shift the transmission to the desired gear.
7. Slowly release the brake lever.
8. Slowly press the throttle with your right thumb and begin driving.
9. Drive slowly at first. Practice turning and using the throttle and brakes on level surfaces.

## Making Turns

Your ATV is equipped with a solid rear axle, which drives both rear wheels equally at all times. This means that the wheel on the outside of the turn must travel a greater distance than the inside wheel when turning and the inside tire

must slip traction slightly.

To turn, steer in the direction of the turn, leaning your upper body to the inside of the turn while supporting your weight on the outer footrest.

This technique alters the balance of traction between the rear wheels, allowing the turn to be made smoothly.

Practice making turns at slow speeds.

**WARNING!** Turning improperly can result in vehicle overturn. Never turn abruptly or at sharp angles. Never turn at high speeds.

## Driving in Reverse

Follow these precautions when operating in reverse:

1. Always check for obstacles or people behind the vehicle.
2. Always avoid backing downhill.
3. Back slowly.
4. Apply the brakes *lightly* for stopping.

5. Avoid turning at sharp angles.
6. Never open the throttle suddenly.

## Driving on Slippery Surfaces

Whenever riding on slippery surfaces such as wet trails or loose gravel, or during freezing weather, follow these precautions:

1. Do not operate on excessively rough, slippery or loose terrain.
2. Slow down when entering slippery areas.
3. Maintain a high level of alertness, reading the trail and avoiding quick, sharp turns,which can cause skids.

4. Never apply the brakes during a skid. Correct a skid by turning the handlebars in the direction of the skid and shifting your body weight forward.

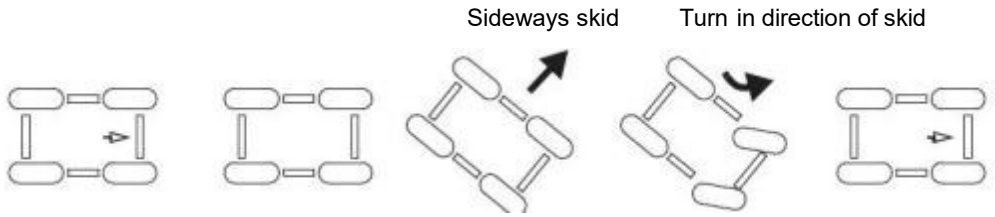


## Driving Uphill

Braking and handling are greatly affected when operating in hilly terrain. Improper procedure could cause loss of control or overturn.

Whenever traveling uphill, follow these precautions:

1. Drive straight uphill.
2. Avoid steep hills (15° maximum).
3. Always check the terrain carefully before ascending any hill.
4. Never climb hills with excessively slippery or loose surfaces.
5. Keep both feet on the footrests.
6. Shift body weight uphill.
7. Proceed at a steady rate of speed and throttle opening. Opening the throttle suddenly could cause the ATV to flip over backwards.
8. Never go over the top of any hill at high speed. An obstacle, a sharp drop, or another vehicle or person could be on the other side of the hill.

9. Remain alert and be prepared to take emergency action. This may include quick dismounting of the vehicle.

## Driving on a hillside

Driving on a hillside is not recommended. Improper procedure could cause loss of control or overturn. Avoid crossing the side of any hill unless absolutely necessary.

If crossing a hillside is *unavoidable*, follow these precautions:

1. Slow down.

2. Lean into the hill, transferring your upper body weight uphill while keeping your feet on the footrests.
3. If the vehicle begins to slide or tip, quickly turn the front wheel downhill, if possible, or dismount on the uphill side *immediately*!

## Driving Downhill

When driving downhill, follow these precautions:

1. Avoid steep hills (15° maximum).
2. Shift body weight uphill. Transfer your weight to the rear of the vehicle.

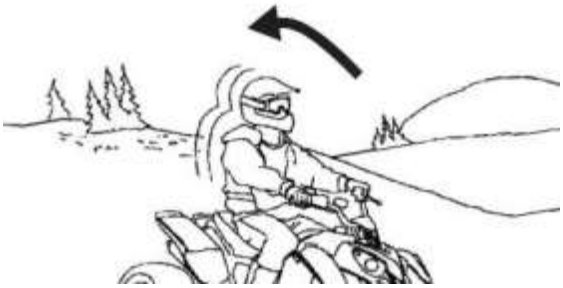

3. Drive straight downhill.
4. Slow down. Excessive speed when traveling downhill can cause loss of control.
5. Apply the front and rear brakes at the same time, and very slightly, to aid in slowing.

## Turning Around on a Hill

If the vehicle stalls while climbing a hill, never back it down the hill! Use the K-turn to turn around.

1. Stop the vehicle and lock the parking brake while keeping body weight uphill.
2. Shift the transmission to neutral.
3. Shut off the engine.
4. Dismount on the uphill side of the vehicle, or on the left if the vehicle is pointing straight uphill.

5. Staying uphill of the ATV, turn the handlebars full left.
6. While holding the brake, release the parking brake lock and slowly release the brake, allowing the ATV to roll around to your right until it's pointing across the hill or slightly downward.

7. Lock the parking brake and remount the ATV from the uphill side, keeping body weight uphill.
8. Restart the engine.
9. Step on the back foot brake.
10. Shift the transmission to forward gear.

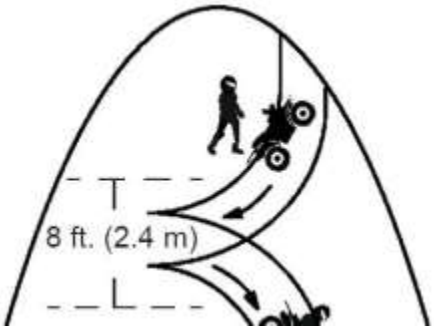

11. Release the parking brake and drive slowly, controlling speed with the rear brake, until the ATV is on more level ground.

## Parking on a Hill or Incline

Avoid parking on a hill or incline if possible. If it's unavoidable, follow these precautions:

1. Stop the engine.
2. Lock the parking brake.

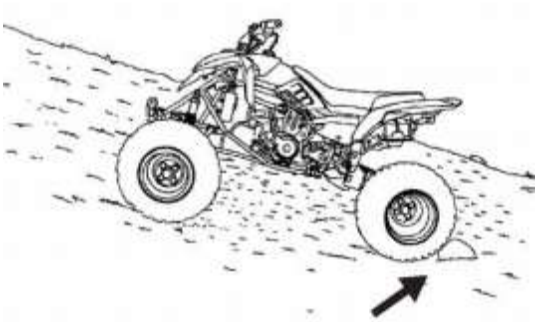

3. Always block the rear wheels on the downhill side as shown in the illustration.

## Driving Over Obstacles

Follow these precautions when operating over obstacles:

1. Always check for obstacles before operating in a new area.
2. Look ahead and learn to read the terrain.

Be constantly alert for hazards such as logs, rocks and low hanging branches.

3. Travel slowly and use extra caution when operating on unfamiliar terrain. Not all obstacles are immediately visible.
4. Never attempt to operate over large obstacles, such as rocks or fallen trees.

## Driving Through Water

Your ATV can safely operate through shallow water. The recommended maximum depth for your ATV is below the bottom of the footrests. Follow these precautions when operating through water:

1. Determine water depth and current before

entering water.

2. If crossing a stream, choose a crossing where both banks have gradual inclines.
3. Avoid operating through deep or fast-flowing water.

4. After driving through water, dry the brakes by applying light pressure to the levers (while moving) until braking action is normal. If you do not perform this procedure, your brakes may be ineffective.

**NOTICE:** Serious engine damage can result if the vehicle is not thoroughly inspected after operating in water deeper than the footrest level. As soon as possible, perform the inspections and maintenance services outlined in the periodic maintenance chart beginning on page 78. Engine oil, gearcase oil and all grease fittings need special attention.

If the vehicle tips or overturns in water, or if the engine stops during or after operating in water, service is required before starting the engine. Your dealer can provide this service. If it's impossible to bring the vehicle in before starting the engine, perform the service outlined on page 90, and take the vehicle in for service at the first opportunity.

# Emission Control Systems

## Noise Emission Control System

Do not modify the engine, intake or exhaust components, as doing so may affect compliance withlocal noise level requirements.

## Crankcase Emission Control System

This engine is equipped with a closed crankcase system. Blow-by gases are forced back to the combustion chamber by the intake system. All exhaust gases exit through the exhaust system.

# Maintenance

To keep the performance good, the vehicle should be checked and maintained at certain interval. The meanings of capital in following table are:

I: Inspection, including check, clean, lubricate, refuel, repair or replacing if necessary.

A: Inspection, adjusting if necessary C: Cleaning R: Replacing T: Tightening

| Maintenance period / Items | Odometer (km) | | | | | | | | | | | |
|---|---|---|---|---|---|---|---|---|---|---|---|---|
| | 300 | 1000 | 2000 | 3000 | 4000 | 5000 | 6000 | 7000 | 8000 | 9000 | 10000 | Everyday check before riding |
| Crankcase lube | R | | | R | | | R | | | R | | I |
| Oil prefilter screen | C | | | C | | | C | | | C | | |
| Air filter | C | | | C | | | C | | | C | | |
| Spark plug | | | | C | | | R | | | C | | |

| | | | | | | | | | | | | |
|---|---|---|---|---|---|---|---|---|---|---|---|---|
| Valve gap | A | | | A | | | A | | | A | | |
| Gear oil | | | | | | | R | | | | | |
| Belt | | | | | | | R | | | | | |
| Clutch | I | | | I | | | I | | | I | | I |
| Brake function, brake pads | I | I | I | I | I | I | I | I | I | I | I | I |
| Brake fluid | | | | I | | | I | | | I | | |
| Driving chain | I | | | I | | | I | | | I | | I |
| Fasteners( Excluding Engine Bolt) | T | | | T | | | T | | | T | | I |
| Engine Bolt | I | | | I | | | I | | | I | | |

* When the mileage is over the highest on the table, please perform according to the period set on the table
* Driving on dust place, it is recommended to clean it frequently.

## Lubrication Guide

| Item | Lube | Method |
|---|---|---|
| Engine Oil | SF15W/40(in summer)<br>SF15W/30(in winter) | See page 83. |
| Gearcase (Transmission)<br>Oil Level | GL-4 85W/90 Lubricant &<br>Transmission Fluid | See page 84. |
| Drive Chain | Chain Lube or SAE 80/90 | See page 103. |
| ▲ Front Suspension<br>(A-Arm) | All Season Grease or grease<br>conforming to NLGI No. 2 | Inspect; tighten fasteners;<br>grease (also after washing ATV<br>or driving in water). |

▲ Perform these procedures more often for vehicles subjected to severe use.

Grease Points

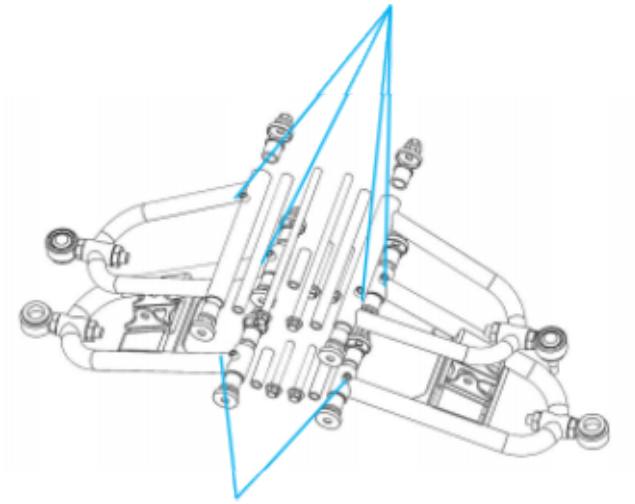

Grease Points

## Engine Oil

**Oil Recommendations**

Always check and change the engine oil at the intervals outlined in the Periodic Maintenance Chart beginning on page 78. recommends the use of SF15W/40(in summer) SF15W/30(in winter). Duty 4-Cycle engine oil for this vehicle. Oil may need to be changed more frequently if oil is not used. Do not use automotive oil.

**NOTICE:** Mixing brands or using a non-recommended oil may cause serious engine damage. Always use the recommended oil. Never substitute or mix oil brands.

## Engine Oil Check

Maintain the oil level within the safe range on the dipstick. Do not overfill.

1. Position the vehicle on a level surface.
2. Remove the dipstick. Wipe it dry with a clean cloth.
3. Reinstall the dipstick completely.
4. Remove the dipstick and check the oil level.

**Tip:** A rising oil level between checks in cool weather driving can indicate contaminants such as gas or moisture collecting in the crankcase. If the oil level is over the full/safe mark, change the oil immediately.

5. Add the recommended oil as needed.
6. Reinstall the dipstick.

Dipstick

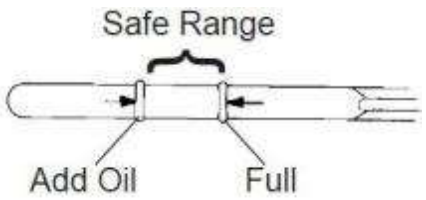


## Engine Oil Change

1. Position the vehicle on a level surface.
2. Clean the area around the pre-filter plug.
3. Start the engine. Allow it to idle for two to three minutes.
4. Stop the engine.

**CAUTION!** Hot oil can cause burns to skin. Do not allow hot oil to contact skin.

5. Place a drain pan under the engine crankcase.

6. Remove the pre-filter plug. Allow the oil to drain completely.
7. Wash the oil pre-filter screen with solvent to remove debris. Allow the screen to air dry.

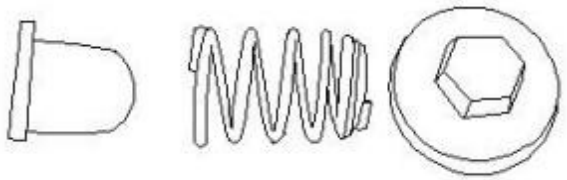

8. Clean the pre-filter plug. Install a new sealing washer on the plug. The sealing surfaces on the plug and crankcase should be clean and free of burrs, nicks or scratches.
9. Reassemble the pre-filter screen and spring to the pre-filter plug.
10. Reinstall the pre-filter drain plug. Torque to 11 ft. lbs. (15 Nm).
11. Remove the dipstick. Add 25.3oz. (750 ml) of the recommended oil. Do not overfill. See the specifications section beginning on page 125 for capacities.
12. Reinstall the dipstick.

13. Start the engine. Allow it to idle for one to two minutes.
14. Stop the engine and inspect for leaks.
15. Check the oil level. Add oil as needed to bring the level to the upper mark on the dipstick.
16. Dispose of used oil properly.

## Transmission Oil Check

The gearcase fill plug is located on the side of the gearcase on the left side of the ATV. Maintain the oil level at the bottom of the fill plug hole threads.

Always check and change the oil at the intervals outlined in the Periodic Maintenance Chart beginning on page 78. recommends the use of GL-4 85W/90 Lubricant &

Transmission Fluid.

1. Position the vehicle on a level surface.
2. Remove the fill plug.
3. View the oil level through the fill hole.
4. If the level is low, add the recommended oil.
5. Reinstall the fill plug.

## Transmission Oil Change

1. Position the vehicle on a level surface.
2. Remove the fill plug.
3. Place a drain pan under the gearcase.
4. Remove the drain plug. Allow the oil to drain completely.
5. Clean and reinstall the drain plug. Torque to 14 ft. lbs. (19 Nm).
6. Add the recommended oil. Maintain the oil level at the bottom of the fill plug hole

threads.

7. Reinstall the fill plug. Check for leaks.
8. Dispose of used oil properly.

**Gearcase Capacity:** 10.8 oz. (320 ml)

**Spark Plugs**

Refer to the specifications section beginning on page 125 for spark plug and gap specifications.

**NOTICE:** Using non-recommended spark plugs can result in serious engine damage. Always use -recommended spark plugs or their equivalent.

Spark plug condition is indicative of engine operation. The spark plug firing end condition should be read after the engine has been warmed up and the vehicle has been driven at higher speeds. Immediately check the spark plug for correct color.

**CAUTION!** A hot exhaust system and engine can cause burns. Wear protective gloves when removing a spark plug for inspection.

**Spark Plug Change**

1. Remove the spark plug cap. Using the special wrench provided in the tool pouch, rotate the spark plug counter-clockwise to remove it.
2. Reverse the procedure for spark plug installation. Torque to 14 ft. lbs. (19 Nm).

## Cylinder Head Torque

Have your dealer or other qualified person check the ATV cylinder head for proper torque at the first service, or after 25 hours.

## Vehicle Immersion

If the vehicle tips or overturns in water deeper than the footrest level, or if the engine stops during or after

operating in water, restarting WILL result in serious engine damage. Take the vehicle in for service before starting the engine. Your dealer can provide this service. If this is not possible, follow the vehicle immersion inspection and drying procedures outlined below. This procedure will allow *short-term operation only* to drive the ATV to a trailer or towing vehicle.

1. Move the ATV to dry land or at the very least, to water below the footrests.
2. Check the air box for any water and dry it if water is present.
3. Remove the spark plug.

4. Turn the engine over several times using the electric start.
5. Dry the spark plug and reinstall it, or replace it with a new plug.
6. Attempt to start the engine. If necessary, repeat the drying procedure.
7. Take the vehicle in for service as soon as possible, whether you succeed in starting it or not. Your dealer can provide the required service.
8. If water has been ingested into the transmission, follow the procedure on page 93 for drying the CVT.

## Constant Variable Transmission (CVT) System

**WARNING**

Failure to comply with the instructions in this warning can result in severe injury or death.

Do not modify any component of the CVT system. Doing so may reduce its strength so that a failure may occur at a high speed. The CVT system has been precision balanced. Any modification will cause the system to be out of balance, creating vibration and additional loads on components.

The CVT system rotates at high speeds, creating large amounts of force on clutch components.

Extensive engineering and testing has been conducted to ensure the safety of this product. However, as the owner, you have the following responsibilities to make sure this system remains safe:

- Always follow all recommended maintenance procedures.
- See your dealer or other qualified person for service and repair assistance.
- This CVT system is intended for use on products only. Do not install it in any other product.
- Always make sure the CVT housing is securely in place during operation.

## CVT Drying

There may be some instances when water is accidently ingested into the CVT system. Use the following instructions to dry it out before operating. The drain plug is located on the bottom of the CVT cover.

1. Remove the drain plug. Allow the water to drain. Reinstall the drain plug.
2. Shift the transmission to neutral.
3. Start the engine. Apply varying throttle for 10-15 seconds to expel the moisture and air-dry the belt and clutches. Do not hold the throttle wide open for more than 10 seconds.

4. Allow the engine RPM to settle to idle speed.
5. Test for belt slippage. If the belt slips, repeat the process.
6. Your vehicle requires service as soon as possible. See your dealer or other qualified service facility for service.

**NOTICE:** Exposure to salt water will cause corrosion to metal components. If your vehicle is operated in salt water areas, rinse it off frequently with fresh water.

## Spark Arrester

**WARNING**

To remove accumulated carbon, clean the spark arrester at the intervals recommended in the Periodic Maintenance Chart beginning on page 78.

Failure to heed these warnings could result in serious injury or death.

- Do not perform service on the spark arrester while the system is hot. Allow components to cool sufficiently before proceeding.

- Wear eye protection and gloves.
- Never run the engine in an enclosed area. Exhaust contains poisonous carbon monoxide gas.

1. Remove the three bolts and remove the arrester from the end of the muffler.
2. Use a non-synthetic brush to clean the side arrester screen. A synthetic brush may melt if components are warm. If necessary, blow debris from the screen with

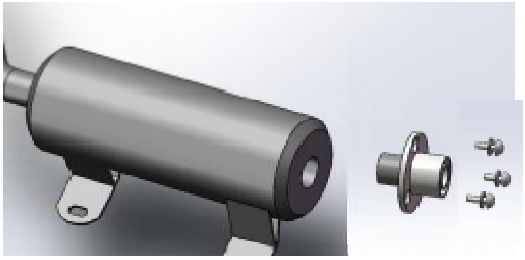

compressed air.

3. Inspect the screen for wear and damage.
   Replace the arrester if damage is found.
4. Reinstall the arrester.
5. Torque the bolts to . (5 Nm).

## Speed control system

The dealer CANNOT, under any circumstances, either prior to the sale or later, even at the consumer's request, remove or adjust any speed limiting devices.

The top speed of this vehicle is restricted to 37 MPH (60 km/h) at manufacture, it is limited by ECU.

## Throttle Cable Adjustment

Always check the throttle for smooth operation before riding. Periodically check the throttle freeplay. It should be kept between 1/16" and 1/8" (1.5 - 3.2 mm). If adjustment is required, turn the adjustment nut until the freeplay falls in to the acceptable limit.

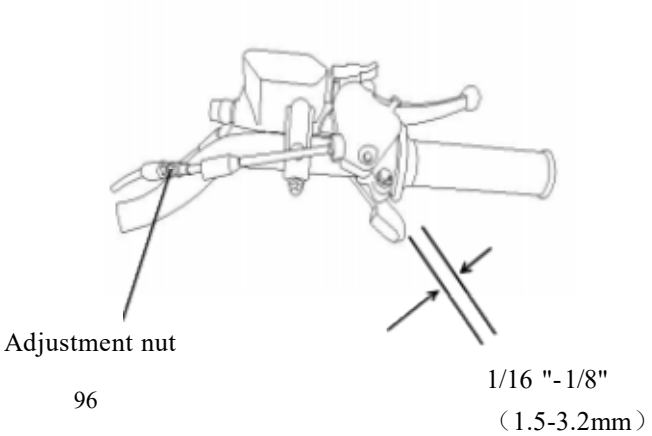

## Front Brake

### *Brake Fluid Reservoir Level*

### *Verification*

With vehicle on a level surface, check brake fluid in reservoir for proper level. Brake fluid level should be between MIN and MAX marks.

NOTE: A low level may indicate leaks or worn brake pads.

## Adding Brake Fluid

Clean filler cap before removing. Add fluid as required. Do not overfill.

NOTE: Ensure filler cap diaphragm is pushed inside the cap before closing the brake fluid reservoir.

### *Recommended Brake Fluid*

Always use brake fluid meeting the specification DOT 4 only.

**WARNING**

To avoid serious damage to the braking system, do not use fluids other than the recommended one, nor mix different fluids for topping up.

**WARNING**

The brake fluid replacement or brake system maintenance and repairs should be performed by an authorized dealer.

## Rear Brake

### *Brake Fluid Reservoir Level*

### *Verification*

With vehicle on a level surface, check brake fluid in reservoir for proper level. Brake fluid level should be

between MIN and MAX marks.

NOTE: A low level may indicate leaks or worn brake pads.

## Adding Brake Fluid

Clean filler cap before removing. Add fluid as required. Do not overfill.

NOTE: Ensure filler cap diaphragm is pushed inside the cap before closing the brake fluid reservoir.

### *Recommended Brake Fluid*

Always use brake fluid meeting the specification DOT 4 only.

**WARNING**

To avoid serious damage to the braking system, do not use fluids other than the recommended one, nor mix different fluids for topping up.

**WARNING**

The brake fluid replacement or brake system maintenance and repairs should be performed by an authorized dealer.

## Toe Alignment

Use the following procedure to check the toe

alignment of the vehicle. The recommended toe alignment is 1/8" to 1/4" (3-6 mm) toe out.

**WARNING!** Severe injury or death can result from improper toe alignment and adjustment. Do not attempt to adjust tie rod alignment. All tie rod adjustments should be performed by an authorized dealer or other qualified service facility.

1. Position the vehicle on a level surface.
2. Place the handlebars in a straight-ahead position.
3. Tie a length of string between two stands as shown in the illustration. Position the stands so that the string is flush with the side of the rear tire. If available, you may use a long straightedge instead of string.

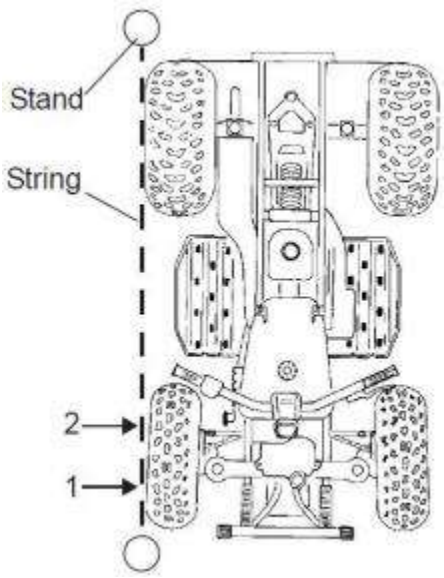

4. Measure the distance from the string to the rim at the front (1) and rear (2) of the front rim. The rear measurement should be 1/16"-1/8" (2-3 mm) more than the front measurement on each side of the vehicle to obtain the recommended 1/8" to 1/4" (3-6 mm) toe out alignment.
5. Repeat the measurement procedure on the other side of the vehicle.
6. If you discover improper alignment, see your dealer for service.

## Steering Inspection

Check the steering assembly periodically for loose nuts and bolts. If loose nuts and bolts are found, see your dealer or other qualified service facility before operating the vehicle.

## Camber and Caster

The camber and caster are non-adjustable.

## Shock Spring Adjustment

The front and rear shock absorber springs are adjustable to increase or decrease spring tension. Rotate the adjuster either clockwise or counter-clockwise to make adjustments.

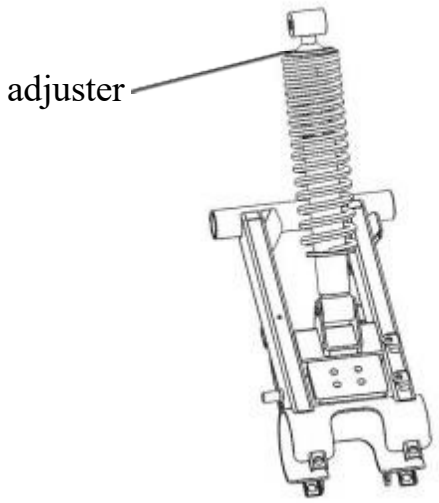

## Drive Chain

Lubricate the drive chain with chain spray lube or an approved chain lube at the general lubrication interval specified in the Periodic Maintenance Chart beginning on page 78. Lubricate more often under severe use, such as in dirty or wet conditions.

**NOTICE:** Washing the drive chain with a high pressure washer or gasoline can cause premature wear and drive chain failure. Don't use a high pressure washer or gasoline to clean the drive chain. Adjusting or operating the ATV with improper rear drive chain slack can result in severe damage to the transmission and drive components. Always make sure the slack is within the stated specifications.

## Drive Chain Slack

1. Check the amount of chain slack by moving the vehicle slightly forward to gain slack at the top side of the chain.
2. The tool will be inserted into the rear axle (in the direction of the arrow) and the chain can be adjusted by rotating the rear axle.
3. Measure chain slack. It should have 1/4"-1/2" (6-12 mm) deflection.

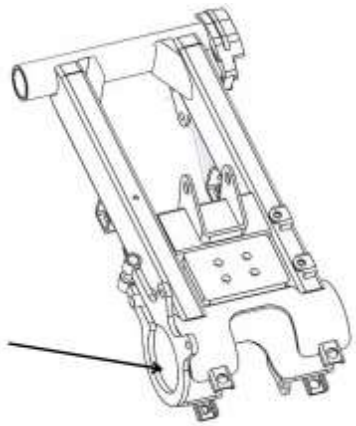

## Air Filter

1. Remove the seat. See page 34.

2. Loosen the bolts and remove the cover.
3. Remove the foam air filter. Wash the foam filter in warm soapy water, then rinse and let dry. If the filter is damaged, install a new foam filter.
4. Apply a commercially available foam filter lubricant to the foam filter.
5. Clean away any oil or sediments in the air box.
6. Reinstall the filter and air box cover. Secure the clips.
7. Reinstall the seat.

**NOTICE:** Never operate the ATV with the filter element removed. Dirt will enter the engine causing rapid wear and severe damage to the engine.

## Handlebar Adjustment

Improper adjustment of the handlebars or incorrect torquing of the adjuster block tightening bolts can

cause limited steering or loosening of the handlebars, resulting in loss of control and possible serious personal injury or death. Follow the adjustment procedures exactly, or see your dealer or other qualified service person for service.

The handlebars can be adjusted for rider preference.

1. Remove the pod to access the handlebar bolts. Loosen the four bolts.
2. Adjust the handlebar to the desired height. Be sure the handlebars do not hit the gas tank or any other part of the vehicle when turned fully to the left or right.
3. Lightly tighten each bolt equally to prevent uneven gaps in the block. Torque the bolts to 24 Nm.

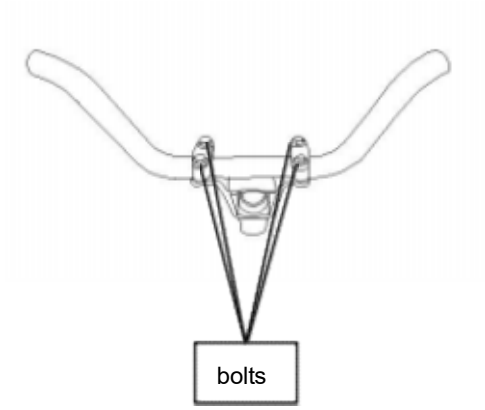


## Tires

**WARNING**

Operating your ATV with worn tires, improperly inflated tires, non-standard tires or improperly installed tires will affect vehicle handling and could cause an accident resulting in serious injury or death. Always follow all tire maintenance procedures as outlined in this manual and on the labels on the vehicle. Always use original equipment size and type when replacing tires.

## Tire Tread Depth

Always replace tires when tread depth is

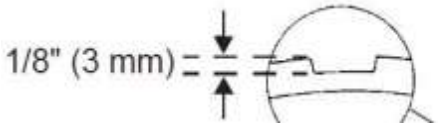

worn to 1/8" (3 mm) or less.

## Wheel Removal

1. Stop the engine and lock the parking brake.
2. Loosen the wheel nuts slightly.
3. Elevate the side of the vehicle by placing a suitable stand under the footrest frame.
4. Remove the wheel nuts and remove the wheel.

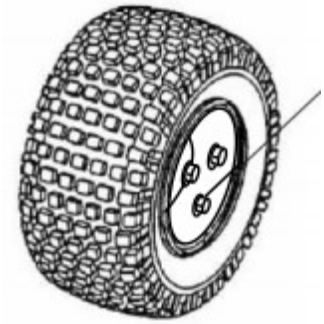


## Wheel Installation

1. Lock the parking brake.
2. Place the wheel in the correct position on the wheel hub. Be sure the valve stem is

toward the outside and rotation arrows on the tire point toward forward rotation.

3. Install the wheel nuts and finger tighten them.
4. Lower the vehicle to the ground.
5. Securely tighten the nuts to 45 Nm.

## Wheel Hub Tightening

Front wheel bearing tightness and spindle nut retention are critical component operations.

All service must be performed by your authorized dealer or other qualified service facility.

## Taillight Replacement

If the Taillight doesn't work, the lamp may

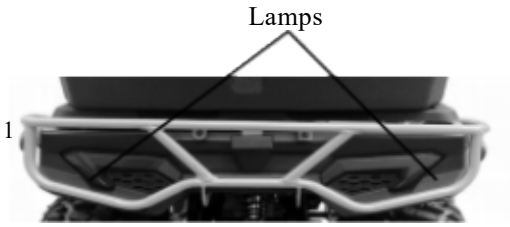

need to be replaced.

1. Remove two screws from each side.
2. Remove the taillight.
3. Test the light for proper operation.
4. Reinstall the screws.

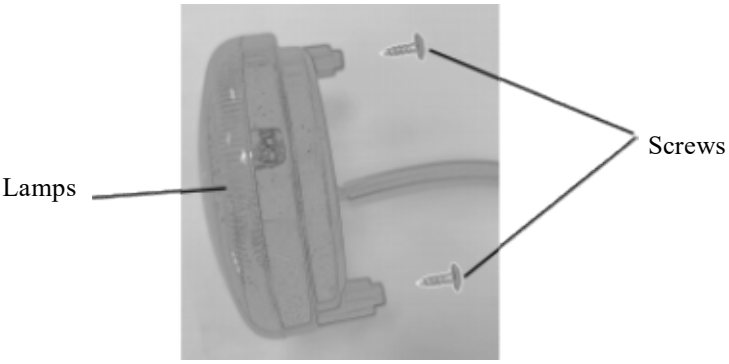


## Battery

**WARNING**

Improperly connecting or disconnecting battery cables can result in an explosion and cause serious

injury or death. When removing the battery, always disconnect the negative (black) cable first. When reinstalling the battery, always connect the negative (black) cable last.

The battery in your ATV is a sealed battery. The sealing strip cannot be removed.
Never add water to this type of battery.
Keep the battery terminals and connections free of corrosion. If cleaning is necessary,remove the corrosion with a stiff wire brush. Wash with a solution of one tablespoon baking soda and one cup water. Rinse well with tap water and dry off with clean shop towels. Coat the terminals with dielectric grease or petroleum jelly to reduce oxidation and excessive power consumption.

**Battery Removal**

1. Remove the battery hold-down strap.
2. Disconnect the black (negative) battery cable first.

3. Disconnect the red (positive) battery cable next.
4. Lift the battery out of the ATV.

**Battery Installation and Connections**

Always install a fully charged battery. Using a new battery that has not been fully charged can damage the battery and result in a shorter life. It can also hinder vehicle performance. If

recharging is necessary, use a .5 amp battery charger

1. Set the battery in its holder.
2. Coat the terminals with dielectric grease or petroleum jelly.
3. Connect and tighten the red (positive) cable first.
4. Connect and tighten the black (negative) cable last.
5. Attach the hold-down strap.
6. Verify that cables are properly routed.

**Battery Storage**

Whenever the vehicle is not used for a period of three months or more, remove the battery from the vehicle, ensure that it's fully charged, and store it out of the sun in a cool, dry place.

Check battery voltage each month during storage and recharge as needed to maintain a full charge.

## Cleaning

Keeping your ATV clean will not only improve its appearance but it can also extend the life of various components.

**NOTICE:** High water pressure may damage components. recommends washing the vehicle by hand or with a garden hose, using mild soap.

Certain products, including insect repellents and chemicals, will damage plastic surfaces. Do not allow these types of products to contact the vehicle.

### Washing the ATV

The best and safest way to clean your vehicle is with a garden hose and a pail of mild soap and water.

1. Use a professional-type washing cloth, cleaning the upper body first and the lower parts last.
2. Rinse with clean water frequently.
3. Dry surfaces with a chamois to prevent water spots.

**Washing Tips**

- Avoid the use of harsh cleaners, which can scratch the finish.
- Do not use a power washer to clean the vehicle.
- Do not use medium to heavy duty compounds on the finish.
- Always use clean cloths and pads for cleaning and polishing. Old or reused cloths and pads may contain dirt particles that will scratch the finish.

## Cleaning

### Washing the ATV

If a high pressure water system is used for cleaning (not recommended), exercise extreme

caution. The water may damage components and could remove paint and decals. Avoid directing the water stream at the following items:

- Wheel bearings
- Brakes
- Cab and body panels
- Labels and decals
- Transmission seals

If warning and safety labels are damaged, contact your dealer.

Grease all zerk fittings immediately after washing. Allow the engine to run for a while to evaporate any water that may have entered the engine or exhaust system.

## Polishing

recommends the use of common household aerosol furniture polish for polishing the finish on your vehicle. Follow the instructions on the container.

### Polishing Tips

- Avoid the use of automotive products, some of which can scratch the finish of your vehicle.
- Always use clean cloths and pads for cleaning and polishing. Old or reused cloths and pads may contain dirt particles that will scratch the finish.

## Storage

### Exterior

Make necessary repairs and clean the vehicle as recommended. See page 115.

### Battery Storage

Remove the battery from the vehicle, ensure that it's fully charged, and store it out of the sun in a cool, dry place. Check battery voltage each month during storage and recharge as needed to maintain a full charge.

### Engine Oil

Change the oil. See page 85.

**Air Filter / Air Box**

Inspect and clean (or replace) the pre-cleaner and air filter. Clean the air box. Drain the sediment tube.

**Fluid Levels**

Inspect fluid levels. Change fluids as recommended in the Periodic Maintenance Chart beginning on page 78.

- Transmission Oil
- Engine Oil

**Lubricate**

Inspect all cables and lubricate all areas of the vehicle as recommended in the Periodic Maintenance Chart beginning on page 78.

**Storage Area/Covers**

1. Make sure tire pressure is at specification.
2. Using suitable supports under the frame, raise the vehicle slightly so that the tires are not touching the ground.
3. Be sure the storage area is well ventilated.
4. Cover the vehicle with an appropriate cover. Do not use plastic or coated materials. They do not allow enough ventilation to prevent condensation, and may promote corrosion and oxidation.

## Warranty

This All-Terrain Vehicle (ATV) emissions limited warranty is in addition to the manufacturer standard limited warranty for All-Terrain Vehicles.

manufacturer warrants that this vehicle are; (1) designed, built, and equipped to conform at the time of initial sale with the requirements of law . And, (2) free from defects in materials and workmanship that may keep it from meeting these requirements.

This emission - related warranty covers components whose failure would increase an engine's emissions, including electronic controls, after treatment, or any other system utilized in this vehicle to control emissions. Replacing or repairing other components not covered by this emissions warranty or the standard warranty is the responsibility of the owner; including the parts, labor and other costs associated with recommended maintenance.

The exclusive remedy for breach of this limited warranty shall be, at the exclusive option of Local dealer repair or replacement of any defective materials, components or products.

THE REMEDIES SET FORTH IN THIS LIMITED WARRANTY ARE THE ONLY REMEDIES AVAILABLE TO ANY PERSON FOR BREACH OF THIS WARRANTY.MANUFACTURER SHALL HAVE NO LIABILITY TO ANY PERSON FOR INCIDENTAL, CONSEQUENTIAL OR SPECIAL DAMAGES OF ANY DESCRIPTION, WHETHER ARISING OUT OF EXPRESS OR IMPLIED WARRANTY OR ANY OTHER CONTRACT, NEGLIGENCE OR OTHERTORT OR OTHER WISE.

ALL IMPLIED WARRANTIES (INCLUDING BUT NOT LIMITED TO ANY IMPLIED WARRANTEIES OF

MERCHANTABILITY AND FITNESS FOR A PARTICULAR PURPOSE) ARE LIMITED IN DURATION TO THE WARRANTY PERIOD DESCRIBED HEREIN..MANUFACTURER DISCLAIMS ALL EXPRESS WARRANTIES NOT STATED IN THIS WARRANTY.

Some states do not allow limitations on how long an implied warranty lasts, so the above limitation may not apply if it is inconsistent with the controlling state law.

This limited warranty excludes failures not caused by a defect in material or workmanship.

This limited warranty does not cover damage due to accidents, abuse or improper handling, maintenance or use. This limited warranty also does not cover any engine that has been structurally altered, or any engine that has been used in racing competition. This limited warranty also does not cover physical damage, corrosion or defects caused by fire, explosions to other similar causes beyond the control of manufacturer .If you have any questions regarding your warranty rights and responsibilities, you should contact the local dealer.

## Specifications

| | |
|---|---|
| Model | ATV 300 |
| Vehicle Weight | 235kg |
| Rated Load Mass | 180kg |
| Loading capacity of dump bed | N/A |
| Length/Width/Height | 1970*1090*915mm |

| | | |
|---|---|---|
| Wheel Base | 910mm | 770mm |
| Front Tires | 25*8-12 | |
| Rear Tires | 25*10-12 | |
| Fuel Capacity | 9L | |
| Ground Clearance | 180mm | |
| Engine Type | 4-Stroke | |
| Cooling | waterl cooled | |
| Bore x Stroke | 62.5 mm *57.4mm | |
| Calibrated Power | 13.5kW | |
| Compression Ratio | 10.5:1 | |
| Lubrication | Pressure and Splash Mixed Lubrication | |
| Starting System | Electric | |
| Fuel System | Unleaded gasoline above 93 | |
| Ignition System | C.D.I. electron ignition | |
| Spark Plug | C7HAS (NGK), A7T, or A7RT | |
| Clutch Type | Automatic centrifugal dry | |
| Transmission Mode | Chain | |

| | |
|---|---|
| Front Brake Type | Liquid brake |
| Rear Brake Type | Liquid brake |
| Brake Control Mode | Front hand brake and rear foot brake |
| Brake Light | LED |

# Troubleshooting

See your dealer if you're unable to identify solutions using the following charts.

## Engine Turns Over, Fails to Start

| Possible Cause | Solution |
|---|---|
| Out of fuel | Refuel, cycle key to ON position three times for 5 seconds each, then start |

| | |
|---|---|
| Clogged fuel filter | Replace the filter |
| Water is present in fuel | Drain the fuel system and refuel |
| Old or non-recommended fuel | Replace with fresh recommended fuel |
| Fouled or defective spark plugs | Inspect plugs and replace if necessary |
| No spark to spark plug | Check the plug and make sure the key is on |
| Water or fuel in crankcase | Your dealer can assist. |
| Low battery voltage | Recharge the battery to 12.8 VDC |
| Mechanical failure | Your dealer can assist. |

## Engine Doesn't Turn Over

| Possible Cause | Solution |
|---|---|
| Low battery voltage | Recharge battery with .9 amp charger |
| Loose battery connections | Check all connections and tighten |
| Loose solenoid connections | Check all connections and tighten |

## Engine Pings or Knocks

| Possible Cause | Solution |
|---|---|
| Poor quality or low octane fuel | Replace with recommended fuel |
| Incorrect ignition timing | Your dealer can assist. |
| Incorrect spark plug gap or heat range | Set gap to specs or replace plugs |

## Engine Runs Irregularly, Stalls or Misfires

| Possible Cause | Solution |
|---|---|
| Fouled or defective spark plugs | Inspect, clean and/or replace spark plugs |

| | |
|---|---|
| Worn or defective spark plug wires | Your dealer can assist. |
| Incorrect spark plug gap or heat range | Set gap to specs or replace plugs |
| Loose ignition connections | Check all connections and tighten |
| Water present in fuel | Replace with new fuel |
| Low battery voltage | Recharge battery to 12.8 VDC |
| Kinked or plugged fuel tank vent line | Inspect and replace |
| Incorrect fuel | Replace with recommended fuel |
| Clogged air filter | Inspect and clean or replace |
| Throttle release switch malfunction | Your dealer can assist. |
| Other mechanical failure | Your dealer can assist. |
| Low or contaminated fuel | Add or change fuel, clean the fuel system |
| Kinked or plugged fuel tank vent line | Inspect and replace |
| Low octane fuel | Replace with recommended fuel |
| Clogged fuel filter | Replace filter |
| Incorrect fuel | Replace with recommended fuel |

## Engine Stops or Loses Power

| Possible Cause | Solution |
|---|---|

| | |
|---|---|
| Out of fuel | Refuel, cycle key to ON position three times for 5 seconds each, then start |
| Kinked or plugged fuel vent line | Inspect and replace |
| Water is present in fuel | Replace with new fuel |
| Fouled or defective spark plugs | Inspect, clean and/or replace spark plugs |
| Worn or defective spark plug wires | Your dealer can assist. |
| Incorrect spark plug gap or heat range | Set gap to specs or replace plug |
| Loose ignition connections | Check all connections and tighten |
| Low battery voltage | Recharge the battery to 12.8 VDC |
| Incorrect fuel | Replace with fresh recommended fuel |
| Clogged air filter | Inspect and clean or replace |
| Throttle release switch malfunction | Your dealer can assist. |
| Other mechanical failure | Your dealer can assist. |
| Overheated engine | Clean engine exterior. Your dealer can assist. |

苏州乐松机电设备有限公司
Suzhou Lersong Electromechanical Equipment Co.,Ltd.