BEAST 1000

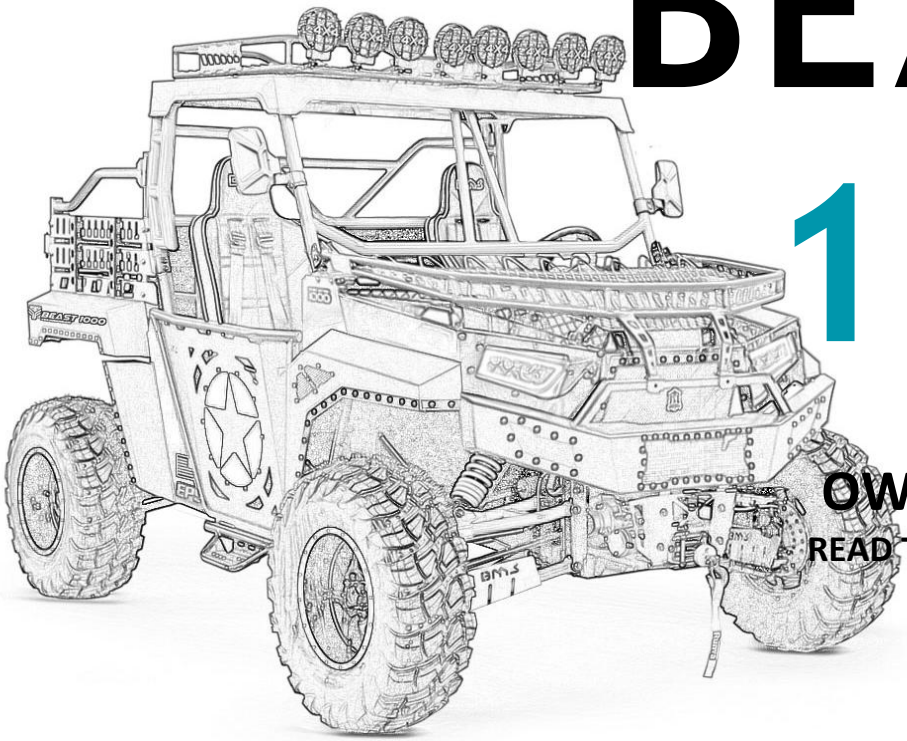

OWNER'S MANUAL

READ THIS MANUAL CAREFULLY

TABLE OF CONTENTS

Foreword....1
Welcome....1
EVAP System (Evaporative Emission Control System)(If equipped)....2
Signal Words....3
Introduction....6
Vehicle Identification Numbers and Key Information....7
Specifications....8
Operator Safety....15
General Safety Precautions....15
Owner Responsibilities....19
Safety Labels, Locations and Warnings....24
Potential Hazard Warnings....29
Controls and Features....46
Primary Controls....46
Secondary Controls....50
Vehicle Features....55
CVT System....65
Engine Braking System (EBS)....66
How To Avoid CVT Drive Belt and Component Failure....67

Dashboard Indicators and Warnings..... 69
Dashboard Indicators and Warnings..... 72
Operating Your Vehicle..... 77
Break-In Period..... 77
Pre-Ride Inspection..... 79
Throttle..... 79
Foot Brake..... 79
Starting the Engine..... 80
Shifting the Transmission..... 81
Safe Operation - Driving Safely..... 84
Responsibilities of the Operator..... 84
Practice Exercises..... 88
Operating Your Vehicle..... 91
Hauling and Towing Loads..... 96
Winch Operation..... 101
Maintenance..... 111
Severe Use Definition..... 112
Periodic Maintenance Schedule and Icon Key..... 113
General Recommended Lubrication..... 114
Pre-Ride Maintenance Checklist..... 115
Break-In Maintenance Checklist..... 117

Periodic Maintenance Schedule....119
Maintenance Procedures....126
Cleaning and Storage....158
Transporting the Vehicle....162
Vehicle Issue Diagnosis....163
Engine doesn’t turn over....163
Engine pings or knocks....163
Engine stops or loses power....164
Engine turns over, Fails to start....166
Engine backfires....167
Engine turns over, Fails to start....167
EFI Malfunction Indicator Light....169
EPS Malfunction Indicator Light....171
Electronic Power Steering (EPS) Fault Diagnosis and Solution....173

FOREWORD

Foreword

Welcome

Thank you for purchasing our 1000CC UTV model Beast, and welcome to our world-wide family of enthusiasts.

For safe and enjoyable operation of your vehicle, be sure to follow the instructions and recommendations in this owner's manual. Your manual contains instructions for minor maintenance. Information about major repairs is outlined in this Service Manual.

Due to constant improvements in the design, quality, or configuration of production components, some minor discrepancies may result between the actual vehicle and the information presented in this publication. We reserves the right to change product features, specifications and components without notice orincurring obligation to the purchaser. Depictions and/or procedures within are intended for reference use only. The most current version of this manual may be available on our website of the market you reside in.

FOREWORD

⚠WARNING
The engine exhaust from this product contains chemicals known to the State of California to cause cancer, birth defects or other reproductive harm.

Catalytic Converter

CAUTION: Please pay attention to the following to protect your catalytic converter:

- Use only unleaded gasoline. Even gasoline that contains a little lead could damage the reactive metals contained in the catalytic converter and disable it.
- Never add rust preventive oil or engine oil into the muffler. Doing so could damage the catalytic converter.

NOTE

Some features described within this manual may not apply to models sold in North America.

All descriptions and directions given are from the operator's perspective when properly seated.

FOREWORD

Signal Words

A signal word calls attention to a safety message or messages, a property damage message or messages, and designates a degree or level of hazard seriousness. The standard signal words in this manual are WARNING, CAUTION and NOTE or NOTICE.

The following signal words and symbols appear throughout this manual and on your vehicle. Your safety is involved when these words and symbols are used. Become familiar with their meanings before reading the manual:

⚠WARNING

This safety alert and icon indicates a potential hazard that may result in serious injury or death.

⚠CAUTION

This safety alert and icon indicates a potential hazard that may result in minor or moderate personal injury and/or damage to the vehicle.

CAUTION

This safety alert without an icon indicates a situation that may result in damage to the vehicle.

NOTE or NOTICE

A note or notice will alert you to important information or instructions.

FOREWORD

NEVER:

- Operate without proper training or instruction.
- Operate on public roads. A collision can occur with another vehicle.
- Operate on paved roads. Pavement may seriously affect handling and control.
- Operate at speeds too fast for your skill, conditions, or the terrain.
- Use ALCOHOL or DRUGS before or while driving this vehicle.

ALWAYS:

- Avoid paved surfaces, which may adversely affect the handling and control.
- Use proper driving techniques to avoid vehicle overturn on hills, rough terrain, and when turning.
- Wear eye protection, helmet and protective clothing.

FOREWORD

READ THE OWNER'S MANUAL

FOLLOW ALL INSTRUCTIONS AND WARNINGS

⚠WARNING
Read, understand, and follow all of the instructions and safety precautions in this manual and on all product labels. Failure to follow the safety precautions could result in serious injury or death.

⚠WARNING
The engine exhaust gas from this product contains CO, which is deadly gas and could cause headaches, giddy, or lose consciousness, even death.

INTRODUCTION

Introduction

Thank you for our 1000CC UTV Model Beast, and welcome to our world-wide family of enthusiasts.

For safe and enjoyable operation of your vehicle, be sure to follow the instructions and recommendations in this owner's manual. Information about major repairs are outlined in this Manual, and should only be performed by a qualified technician.

If you have questions or concerns about your vehicle

INTRODUCTION

Vehicle Identification Numbers and Key Information

Record your vehicle's identification numbers in the spaces provided. Remove the spare key and store in a safe place. Your key can be duplicated only by mating a key blank with one of your existing keys. If both keys are lost, the complete lock assembly must be replaced.

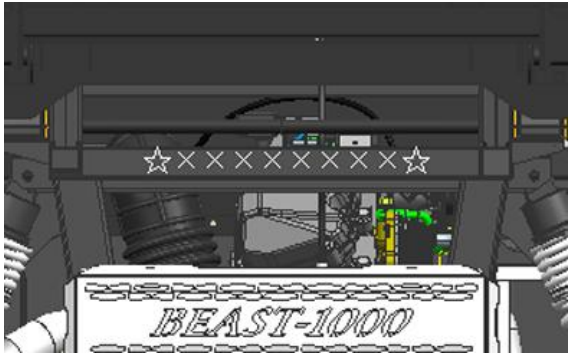

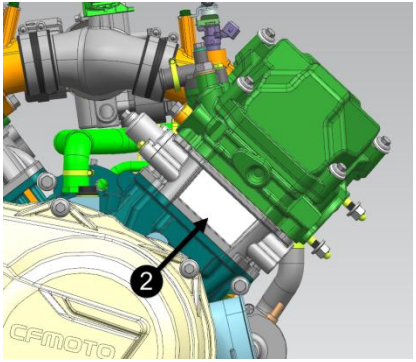

1. Vehicle Identification Number: _____
2. Engine Serial Number: _____

SPECIFICATIONS

Item	LB3-UTV1000	LB6-UTV1000
Overall Length	119.6 in. (3038 mm)	155.5 in. (3950 mm)
Overall Width	72.8 in. (1850 mm)	72.8 in. (1850 mm)
Overall Height	81.1 in. (2060 mm)	81.1 in. (2060 mm)
Wheel Base	100.9 in. (2565 mm)	117.7 in. (2990mm)
Ground Clearance	13.8 in. (350 mm)	13.8 in. (350 mm)
Basic Weight	1892 lb. (860 kg)	2530 lb. (1150 kg)
Rear Cargo Box Weight Capacity	770.9 lb. (350 kg)	
Rear Cargo Box Dimension	945*1416*260	
Maximum Vehicle Load Allowed	1508.8 lb.(685 kg)	
Recommended Towing Capacities: Towing Hitch Weight Trailer and Cargo Weight	 176 lb. (80 kg) 1763.7 lb. (800 kg)	
Engine Model And Type	2V91Y	
Type	V-twin, 4-stroke, liquid-cooled, 8 valves, SOHC	

SPECIFICATIONS

Item	LB3-UTV1000	LB6-UTV1000
Bore × Stroke	3.5 in.x 2.91 in. (91 mmx 74 mm) x 2	
Displacement	962.6 mL	
Compression Ratio	10.6:1	
Starting Type	Electric start	
Lubrication Type	Pressure / Splash lubrication	
Engine Oil: Type Engine Oil Volume: Capacity Change / Oil Filter	 SAE 10W-40 / SAE 5W-40 / SAE 15W-40 (See page 78 for oil viscosity chart) 2.73 qt. (2.6 L) 2.63 qt. (2.5 L)	
Transmission oil Type Capacity Change	SAE75W-90GL- 5 0.62 qt. (0.6 L)	
Coolant: Type Capacity Mix Ratio	 Commercially available – Safe for aluminum engines 4.44 qt. (4.2 L) 50% coolant / 50% distilled water	

SPECIFICATIONS

Item	LB3-UTV1000	LB6-UTV1000
Rear Differential Oil: Type Volume: Periodic Oil Change	SAE80W/90GL-5 13.5 oz. (400 mL)	
Front Differential Oil: Type Volume Periodic Oil Change	SAE80W/90GL-5 11.1 oz. (330 mL)	
Air Filter	Paper type	
Fuel Type Fuel Tank Capacity Fuel Reserve Amount At Fuel Gauge‘Flash’ (Approximate)	89 or higher unleaded gasoline 7.95 gallons (30 L) 0.9 gallons (3.5 L)	

SPECIFICATIONS

Item			LB3-UTV1000	LB6-UTV1000
Spark Plug Type			DCPR8E (NGK)	
Spark Plug Gap			.031in ~ .035in. (0.8mm~0.9mm)	
Transmission	Transmission		CVT + Gearbox	
	Gear Shift/Order		Manual / L—H—N—R—P	
	CVT Ratio		0.70~2.88	
	Engine Brake System (EBS)		Only for Australia market	
	Gear Ratio	Low Gear	43/17=2.529	
		High Gear	32/28=1.143	
		Reverse	29/13=2.231	
Chassis Frame			Steel tube	
Tires:				
Type			Tubeless	
Front			29 × 9.00 R14 60L / 29×9.11-14 61L	
Rear			29 × 11.00 R14 66L / 29×11.00-14 70L	
Wheel Bolt Pattern			4x110mm	

SPECIFICATIONS

Item	LB3-UTV1000	LB6-UTV1000
Tire Pressure: Front Rear	 14 PSI (97 kPa) 18 PSI (124 kPa)	
Brake System:	Front axles: Double-disc / Rear axles: Double-disc	
Foot Brake Type / Operation	Foot operated Four wheel disc	
Parking Brake Type / Operation	Operated by hand Rear wheel mechanical disc brake only	
Brake Fluid Type	DOT 4	
Suspension: Front Suspension Rear Suspension	 Double A-arm independent Double A-arm independent	

SPECIFICATIONS

Item	LB3-UTV1000	LB6-UTV1000
Shock Absorber:		
Front Shock Absorber	Coil spring/Oil dampened	
Rear Shock Absorber	Coil spring/Oil dampened	
Wheel Travel:		
Front Wheel Travel	9.1 in. (230 mm)	
Rear Wheel Travel	9.1 in. (230 mm)	
Electrical System:		
Ignition	Electronic	
Charging	Rectified A/C 600 Watt @ 5000 rpm	
Battery	12 Vdc / 30 Amp Hr	

SPECIFICATIONS

Item	LB3-UTV1000	LB6-UTV1000
Light System: Head Lamp, Low Beam Head Lamp, High Beam Front Position Light Tail Light/Brake Light	 LED 24W×2 white LED 40W×2 white LED 4W×2 white LED 3W×2 white	
Dashboard	LED and LCD -- Non-repairable	
Fuses	Main – 40 Ax 1 Headlight – 25 A x 1 Auxiliary – 15 A x 3 Auxiliary – 10 A x 2 ECU – 5 A x 1 EPS – 40 A x 1	

OPERATOR SAFETY

Operator Safety

General Safety Precautions

⚠WARNING

Failure to heed the warnings contained in this manual can result in serious injury or death. This vehicle is not a toy and can be hazardous to operate. This vehicle handles differently from other vehicles, such as cars. A collision or rollover can occur quickly, even during routine maneuvers like turning or driving over obstacles, if you fail to take proper precautions.

Read this owner's manual. Understand all safety warnings, precautions and operating procedures before operating this vehicle.

Age Restrictions

This vehicle is an ADULT VEHICLE ONLY. Operation is prohibited for anyone under the age of 16. No passengers under age 12 are allowed on the vehicles designed to carry passengers.

Know Your Vehicle

As the operator of the vehicle, you are responsible for your personal safety, the safety of others, and the protection of the environment. Read and understand your owner's manual, which includes valuable information about all aspects of your vehicle, including safe operating procedures.

OPERATOR SAFETY

Equipment Modifications

We are concerned with the safety of our customers and for the general public. Therefore, we strongly recommend that consumers do not install on a vehicle, any equipment that may increase the speed or power of the vehicle, or make any other modifications to the vehicle for these purposes. Any modifications to the original equipment of the vehicle create a substantial safety hazard and increase the risk of body injury. The warranty on your vehicle is terminated if any unapproved accessory equipment has been added to the vehicle, or if any modifications have been made to the vehicle that increase its speed or power.

NOTE:

The addition of certain accessory equipment which may change the handling and performance characteristics of the vehicle include, but are not limited to; mowers, plow blades, oversize tires, sprayers, large racks, lift kits and trailers. Use only approved accessories, and familiarize yourself with their function and effect on the vehicle.

Avoid Carbon Monoxide Poisoning

All engine exhaust contains carbon monoxide, a deadly gas. Breathing carbon monoxide can cause headaches, dizziness, drowsiness, nausea, confusion and eventually death.

Carbon monoxide is a colorless, odorless, tasteless gas that may be present even if you do not see or smell any engine exhaust. Deadly levels of carbon monoxide can collect rapidly, and you can quickly be overcome and unable to save yourself. Also, deadly levels of carbon monoxide can linger for hours or days in enclosed or poorly ventilated areas.

To prevent serious injury or death from carbon monoxide:

- Never run the vehicle in poorly ventilated or partially enclosed areas.
- Never run the vehicle outdoor where engine exhaust can be drawn into a building through openings such as windows and doors.

OPERATOR SAFETY

Avoid Gasoline Fires and Other Hazards

Gasoline is extremely flammable and highly explosive. Fuel vapors can spread and be ignited by a spark or flame many feet away from the engine. To reduce the risk of fire or explosion, follow these instructions:

- Use only an approved gasoline container to store fuel.
- Never fill the gasoline container in the vehicle cargo box or on the vehicle. An electrical static discharge may ignite the fuel.
- Strictly adhere to proper fueling procedures.
- Never start or operate the engine if the fuel cap is not properly installed. Gasoline is poisonous and can cause injury or death.
- Never siphon gasoline by mouth.
- If you swallow gasoline, get any in your eye(s), or inhale gasoline vapor, see a doctor immediately.
- If gasoline spills on you, wash with soap and water and change your clothes.

Fuel Minimum Octane Rating and Safety Warnings

The recommended fuel for your vehicle is 89 Octane minimum, premium or mid-grade fuel (a maximum blend of 10% ethanol is allowed). Non-oxygenated (ethanol-free) fuel is recommended for best performance in all conditions.

OPERATOR SAFETY

⚠WARNING
Gasoline is highly flammable and explosive under certain conditions.
Allow the engine and exhaust system to cool before filling the tank.
Always exercise extreme caution whenever handling gasoline.
Always refuel with the engine stopped, and outdoors or in a well ventilated area.
Never carry a plastic container with gasoline in the cargo area while riding. Static electricity between the cargo area and container could cause a spark.
Do not smoke or allow open flames or sparks in or near the area where refueling is performed, or where gasoline is stored.
Do not overfill the tank. Do not fill to the tank neck.
If gasoline spills on your skin or clothing, immediately wash it off with soap and water and change clothing. Never start the engine or let it run in an enclosed area. Engine exhaust fumes are poisonous and can cause loss of consciousness or death in a short time.
The engine exhaust from this product contains chemicals known to cause cancer, birth defects or other reproductive harm. Operate this vehicle only outdoors or in well-ventilated areas.

Avoid Burns from Hot Parts

The exhaust system and engine become hot during operation. Avoid contact during and shortly after operation to avoid burns.

OPERATOR SAFETY

Owner Responsibilities

Be Qualified and Responsible

Read this Owner's Manual and the warning decals on this vehicle carefully. Take a safety training course on open areas if available. Practice at low speeds. Higher speeds require greater experience, knowledge and suitable riding conditions. Become completely familiar with the operational controls and the general operation of the vehicle.

This vehicle is an ADULT VEHICLE ONLY. Operation is prohibited for anyone under 16 years of age. Operators must be tall enough to be properly seated back against the backrest with the seat belt fastened, to hold the steering wheel with both hands and still be able to reach the full stroke of brake and throttle pedals with the right foot, and able to firmly plant their left foot on the footrest.

Operators may be required to have a proper driver's license in accordance with local laws.

Carrying a Passenger

- Only carry two passengers. The passenger must be properly seated in the passenger seat.
- The passenger must be at least 12 years old and tall enough to always be properly seated against the backrest with the seat belt fastened, holding handhold, and feet firmly planted; right foot on the footrest and the left foot on the vehicle floor.
- Never carry a passenger who has used drugs or alcohol, or is tired or ill. These slow reaction time and impair judgment.
- Instruct the passenger to read the vehicle's safety labels.
- Never carry a passenger if you judge their ability or judgment is insufficient to concentrate on the terrain conditions and adapt accordingly. More specifically for side-by-side vehicles, the passenger must also pay constant attention to the terrain ahead and be able to brace for bumps.

OPERATOR SAFETY

Riding Carefully

- This vehicle is not a toy and can be hazardous to operate. This vehicle handles differently from other vehicles such as motorcycles or cars. A collision or rollover can occur quickly, during abrupt maneuvers such as sharp turns, acceleration or deceleration, and driving on hills or over obstacles if you fail to take proper precautions.
- Never operate at excessive speeds. Always operate at a speed that is proper for the terrain, visibility, and operating conditions, and your experience.
- Never attempt jumps, side slides, donuts, or any other stunts.
- Never attempt rapid acceleration or deceleration when performing a sharp turn. This may result in a rollover.
- Never attempt skidding or sliding. If vehicle starts to skid or slide, counter steer in the direction of skidding or sliding. On extremely slippery surfaces, such as ice, go slowly and be very cautious in order to reduce the chance of skidding out of control.
- Always be sure there are no obstacles or people behind the vehicle when reversing. Pay attention to blind spots. When it is safe to proceed in reverse, go slowly.
- Never exceed the stated load limits for this vehicle. Cargo must be properly secured. Reduce speed, allow for greater braking distance and follow other instructions in this manual.
- Ensure that cargo is well distributed in the cargo box. Otherwise, it could change the center of gravity and may result in rollover.

Roll Over Protection System (ROPS)

- The ROPS on this vehicle meets the performance requirements of ISO 3471:2008. The ROPS can limit intrusions of outside objects and reduce your risk of injury in rollovers.

OPERATOR SAFETY

- Always follow all safe operating practices outlined in this manual to avoid vehicle rollover.
- Do not put your hands and/or feet outside of the vehicle when driving. The ROPS will not protect you from injury in all rollovers.
- Always have your authorized technicians thoroughly inspect the ROPS if it ever becomes damaged in any way.

Occupant Restraint System

- This vehicle is designed to carry one driver and two passengers, both wearing proper protective gear.
- The driver and passenger must latch the side doors or side nets and wear the seat belts at all times when riding.

Terrain Conditions

- Avoid sharp turns, abrupt acceleration and sudden braking when passing public roads.
- Always go slowly and be extra careful when operating on unfamiliar terrain. Always be alert to changing terrain conditions when operating this vehicle. Take the time to learn how the vehicle performs in different environments.
- Never operate on excessively rough, slippery or loose terrain until you have learned and practiced the skills necessary to control this vehicle on such terrain. Always be especially cautious on these kinds of terrain.
- Never operate this vehicle on hills too steep for the vehicle or your abilities. Practice on small inclines.
- Always follow proper procedures for climbing or going down hills. Never go over the top of any hill at high speed.
- Never attempt steep hills or side hilling when pulling a trailer.

OPERATOR SAFETY

- Always check for obstacles before operating in a new area. Always follow proper procedures when

operating over obstacles or fallen trees.

- Never operate this vehicle in deep water or fast flowing water. Remember that wet brakes may have reduced stopping ability. Test your brakes after leaving water. If necessary, apply them several times while driving slowly to let friction dry out the brakes.
- Always ensure to properly park the vehicle on the flattest terrain section available. Put the shift lever in PARK, stop the engine, and remove the key before leaving the vehicle.
- Never assume that the vehicle will go everywhere safely. Sudden changes in terrain caused by holes, depressions, banks, softer or harder ground, or other irregularities may cause the vehicle to topple or become unstable. To avoid this, slow down and always observe the terrain ahead. If the vehicle begins to topple or rollover, the best advice is to immediately steer in the direction of the rollover.
- Never attempt to prevent a rollover with your arms or legs. Always keep limbs inside the ROPS cage.

OPERATOR SAFETY

Safe Riding Gear

Always wear clothing suited to the type of riding. Operating this vehicle requires wearing special protective clothing for comfort and to reduce the chance of injury:

1. A helmet is the most important piece of protective gear for safe riding. An approved helmet can prevent a severe head injury.
2. Eye protection. A pair of goggles or a helmet face shield offers the best protection for your eyes. They should be kept clean and be a shatter-proof design. Do not depend on sunglasses for proper eye protection.
3. Off-road style gloves with knuckle pads are the best for comfort and protection.
4. The best footwear is a pair of strong over-the-calf boots with heels.
5. Always wear long pants and long sleeve shirts to protect arms and legs. Riding pants and a jersey that have kneepads and shoulder pads provide the best protection.

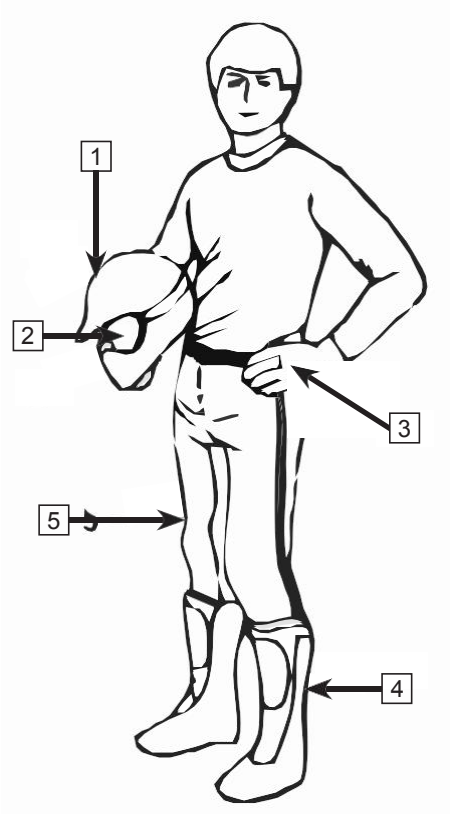

OPERATOR SAFETY

Safety Labels, Locations and Warnings

Warning labels have been placed on the vehicle for your protection. Read and follow the instructions on each decal carefully. If a decal becomes illegible or comes off, contact your dealer to purchase a replacement. Read and follow the safety warnings in this manual.

OPERATOR SAFETY

Safety Labels

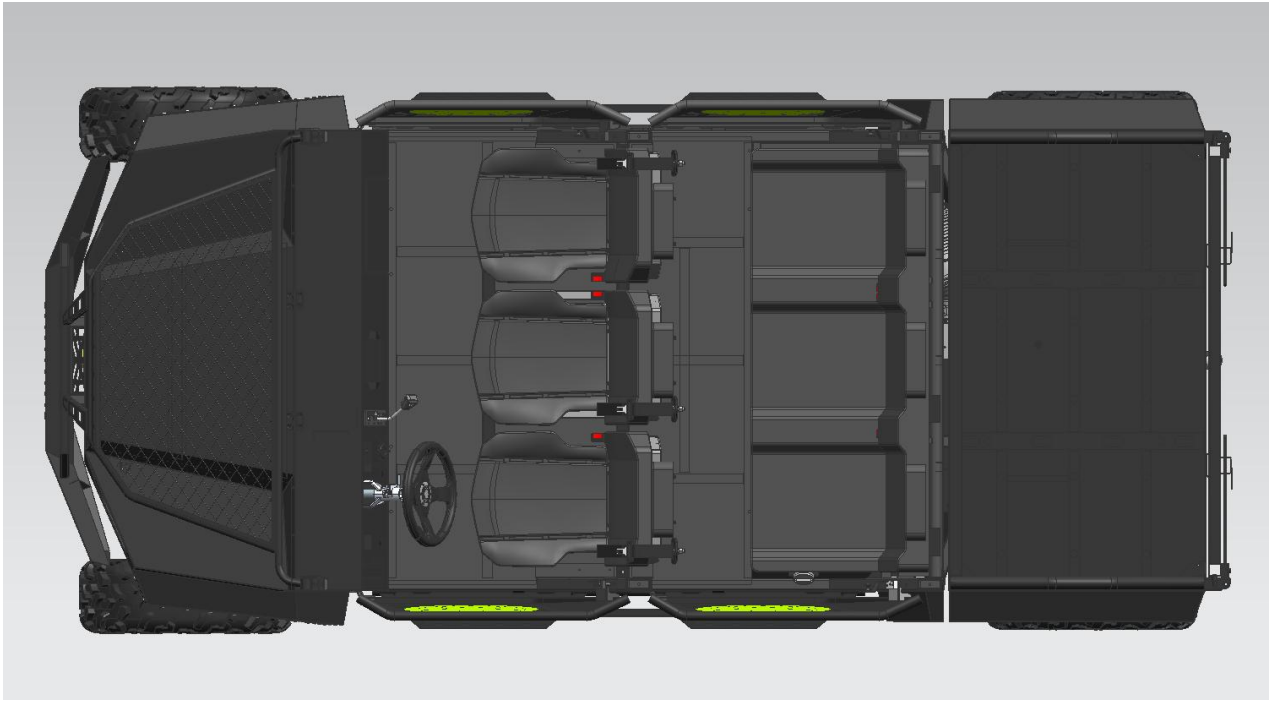

OPERATOR SAFETY

Safety Labels

1

2

NOTICE

Check engine oil every 500 kilometers (310 miles)
Vérifier le niveau d'huile moteur tous les 500 kilomètres (310 miles)

905B-190413-US13C

3

4

WARNING

REMOVAL OF THIS MUFFLER IS A VIOLATION OF CLEAN AIR ACT § 203 AND CONSIDERED TAMPERING. VIOLATORS ARE SUBJECT TO A FEDERAL FINE OF UP TO $37,500 PER OCCURRENCE.

9CR6-190204 US1311

WARNING

Improper loading of a trailer may cause loss of vehicle control, resulting in severe injury or death.

- Maximum unbraked towing mass **1764 lbs.(800 kg)**.
- Maximum unbraked tongue mass **176 lbs.(80 kg)**.

5HY0-190008 US184

6

WARNING

Improper tire pressure or overloading can cause loss of control.
Loss of control can result in severe injury or death.

- Cold tire pressure:
  Front: **10** psi(**70** kPa)
  Rear: **14** psi(**100** kPa)
- Maximum weight capacity:
  CAB: **1378** lbs. (**625**kg)
  WITHOUT CAB: **1510** lbs. (**685**kg)

5HY0-190007 US184

OPERATOR SAFETY

Safety Labels

9

WARNING

Keep hands, body, and other people away from pinch points when lowering bed. Do not hold the cage/frame while closing bed.

5HY0-190005 US17A

7

WARNING

This position is the CVT inlet filter screen. When using the vehicle, the filter screen should be checked; disassemble and clean it if necessary, otherwise the service life of CVT belt will be affected.

5HY0-190019 US182

8

WARNING

This position is the air filter inlet screen. When using the vehicle, the filter screen should be checked; disassemble and clean it if necessary, otherwise engine performance will be affected.

5HY0-190018 US182

12

WINCH CONTROL HANDLE OUTLET

5HY0-190021 US182

10

WARNING

Severe INJURY or DEATH can result if you ignore the following:

- Maximum Load in Cargo Bed: **771** lbs.(**350** kg).
- Never carry passengers in cargo bed.
- Cargo can affect handling and stability. Read Owner's Manual before loading or towing.
- When loading with cargo or towing a trailer:Reduce speed and allow more room to stop. Avoid hills and rough terrain.
- Be sure cargo is secured - a loose load could change handling unexpectedly.
- Keep weight in the cargo bed centered, and as low and far forward as possible. Top - heavy loads increase the risk of overturn.

5HY0-190005 US184

14

WARNING

P R N H L

- To avoid transmission damage, shift only when vehicle is stationary and at idle.

APPLY BRAKE TO START

- When this vehicle is not in operation or unattended, place shift in the park position.
- Stop the vehicle and apply the Brake before using the Shift Lever, the 2WD/4WD Switch and the Diff Lock Switch.

- Must use Low Gear if total payload is greater than **584** lbs. (**265**kg).
- Total payload includes weight of operator, passenger, cargo, accessories and trailer.

5HY0-190017 US184

13

11

WARNING

Improper Use of Off-Highway Vehicles Can Cause Severe Injury or Death

Be Prepared

- Fasten seat belts and make sure nets or doors are securely latched in place.
- Wear an approved helmet and protective gear.
- Each rider must be able to sit with back against seat, foot flat on the floor or on footrest, and hands on steering wheel or handholds. Stay completely inside the vehicle.

Rollovers have caused severe injuries and death, even on flat, open areas.

Avoid loss of control and rollovers:

- Avoid abrupt maneuvers, sideways sliding, skidding or fishtailing, and never do donuts.
- Avoid hard acceleration when turning, even from a stop.
- Slow down before entering a turn.
- Plan for hills, rough terrain, ruts, and other changes in traction and terrain.
- Avoid paved surfaces.
- Avoid side hilling (riding across slopes).

Be Sure Riders Pay Attention and Plan Ahead

If you think or feel the vehicle may tip or roll, reduce your risk of injury :

- Keep a firm grip on the steering wheel or handholds and brace yourself.
- Do not put any part of your body outside of the vehicle for any reason.
- NEVER attach to the cage to pull a load. This can cause the vehicle to tip over.

Read the Operator's Guide and Safety Labels and Watch the Safety Video.Follow All Instructions and Warnings.

WARNING

Require Proper Use of Your Vehicle

Do your part to prevent injuries:

- Do not allow careless or reckless driving.
- Make sure operators are 16 or older with a valid driver's license.
- Do not let people drive or ride after using alcohol or drugs.
- Do not allow operation on public roads-collisions with cars and trucks can occur.
- Do not exceed seating capacity: 3 occupants.
- Never operate with a passenger under the age of 12.All riders must be able to sit with backs against the seat. Both feet flat on the floor and both hands on the steering wheel (if driving) or on a passenger hand hold.

DRIVER UNDER 16

5HY0-190002 US184

OPERATOR SAFETY

Safety Labels

15

16

OPERATOR SAFETY

Potential Hazard Warnings

⚠**WARNING**

POTENTIAL HAZARD:

Operating this vehicle without proper instruction.

WHAT CAN HAPPEN:

The risk of an accident is greatly increased if the operator does not know how to operate the vehicle properly in different situations and on different types of terrain.

HOW TO AVOID THE HAZARD:

Beginning and inexperienced operators should complete a safety training course if offered by dealer. Operators should regularly practice the skills learned in the course and the operating techniques described in the owner's manual.

⚠**WARNING**

POTENTIAL HAZARD:

Failure to follow the age recommendations for this vehicle.

WHAT CAN HAPPEN:

Severe injury and/or death could occur if a child under the minimum age recommendation operates this vehicle. Even though a child may be within the recommended age group for operating, he/she may not have the skills, abilities, or judgment needed to operate safely and could be susceptible to accident or injury.

HOW TO AVOID THE HAZARD:

Operation is prohibited for anyone under 16 years of age.

OPERATOR SAFETY

⚠**WARNING**

POTENTIAL HAZARD:

Carrying more passengers than the rated capacity.

WHAT CAN HAPPEN:

A passenger not seated in the vehicle could be ejected from the vehicle unexpectedly or make contact with moving components, both of which can result in severe injury or death.

HOW TO AVOID THE HAZARD:

Never allow carrying more than two passengers.

⚠**WARNING**

POTENTIAL HAZARD:

Operation on paved surfaces such as sidewalks, trails, parking lots, or public highways and streets.

WHAT CAN HAPPEN:

All-terrain tires are designed for off-road use. Driving on paved surfaces greatly affects how a vehicle handles, which can result in loss of control and/or an accident.

HOW TO AVOID THE HAZARD:

Never drive on paved surfaces. If it is unavoidable, slow down and do not make sudden turning or braking maneuvers.

Never operate on public highways or streets if it is not allowed by law. Check local laws to determine if it is legal to do so.

OPERATOR SAFETY

⚠**WARNING**

POTENTIAL HAZARD:

Operating this vehicle without wearing approved helmet, eye protection, and protective clothing.

WHAT CAN HAPPEN:

Operating without an approved helmet increases the risk of a severe head injury or death in the event of an accident. Operating without eye protection could result in an accident and could increase the chance of a severe eye injury in the event of an accident. Operating without protective clothing could increase the chance of a severe injury.

OPERATOR SAFETY

HOW TO AVOID THE HAZARD:

Always wear an approved helmet that fits properly. Always wear eye protection (goggles or face shield), gloves, long-sleeved shirt or jacket, long pants, and over-the-calf boots.

⚠WARNING

POTENTIAL HAZARD:

Operating the vehicle after consuming alcohol or drugs.

WHAT CAN HAPPEN:

Consumption of alcohol and/or drugs could seriously affect operator judgment. Reaction time may be slower and operator balance and perception could be affected. Consumption of alcohol and/or drugs before or while operating a vehicle could result in an accident causing severe injury or death.

HOW TO AVOID THE HAZARD:

Never consume alcohol or drugs before or while operating the vehicle.

OPERATOR SAFETY

⚠**WARNING**

POTENTIAL HAZARD:

Operating at excessive speeds.

WHAT CAN HAPPEN:

Excessive speed increases the operator's chance of losing control, which can result in an accident.

HOW TO AVOID THE HAZARD:

Always operate at a speed that's proper for the terrain, visibility and operating conditions, and your experience.

⚠**WARNING**

POTENTIAL HAZARD:

Attempting slides, jumps, and other stunts.

WHAT CAN HAPPEN:

Attempting stunts increases the chance of an accident, including an overturn.

HOW TO AVOID THE HAZARD:

Never attempt slides, jumps, or other stunts.

OPERATOR SAFETY

⚠**WARNING**

POTENTIAL HAZARD:

Failure to inspect the vehicle before operating. Failure to properly maintain the vehicle.

WHAT CAN HAPPEN:

Poor maintenance increases the possibility of an accident or equipment damage.

HOW TO AVOID THE HAZARD:

Always inspect your vehicle before each use to make sure it's in safe operating condition.

Always follow the inspection and maintenance procedures and schedules described in the owner's manual.

⚠**WARNING**

POTENTIAL HAZARD:

Extending arms, hands, or legs outside the ROPS bars of the vehicle during operation.

WHAT CAN HAPPEN:

Severe injury can occur to arms, hands, or legs if the vehicle overturns or rolls over in an accident.

HOW TO AVOID THE HAZARD:

Always keep arms, hands, or legs inside the vehicle, hands on the steering wheel or hand grip, and keep both feet on the footrests of the vehicle during operation.

OPERATOR SAFETY

⚠**WARNING**

POTENTIAL HAZARD:

Failure to use extra caution when operating on unfamiliar terrain.

WHAT CAN HAPPEN:

Unfamiliar terrain may contain hidden rocks, bumps, or holes that could cause loss of control or overturn.

HOW TO AVOID THE HAZARD:

Travel slowly and use extra caution when operating on unfamiliar terrain. Always be alert to changing terrain conditions.

⚠**WARNING**

POTENTIAL HAZARD:

Turning improperly.

WHAT CAN HAPPEN:

Improper turns could cause loss of control and lead to a collision or overturn.

HOW TO AVOID THE HAZARD:

Always follow proper procedures for turning as described in the owner's manual. Practice turning at slow speeds before attempting to turn at faster speeds. Never turn at excessive speed.

OPERATOR SAFETY

⚠WARNING

POTENTIAL HAZARD:

Failure to use extra caution when operating on excessively rough, slippery or loose terrain.

WHAT CAN HAPPEN:

Operating on excessively rough, slippery or loose terrain could cause loss of traction or loss of control, which could result in an accident or overturn.

HOW TO AVOID THE HAZARD:

Do not operate on excessively rough, slippery or loose terrain until you've practiced and learned the skills necessary to control the vehicle on such terrain. Always use extra caution on rough, slippery or loose terrain.

⚠WARNING

POTENTIAL HAZARD:

Climbing excessively steep hills or climbing hills improperly.

WHAT CAN HAPPEN:

Improper hill climbing could cause loss of control or overturn.

HOW TO AVOID THE HAZARD:

Never operate on hills too steep for the vehicle or for your abilities. Practice on smaller hills before attempting large hills. Always check the terrain carefully before ascending any hill. Never climb hills with excessively slippery or loose surfaces. Never open the throttle suddenly while traveling uphill. The vehicle could flip over backwards. Never go over the top of any hill at high speed. An obstacle, a sharp drop, another vehicle, or person could be on the other side of the hill.

OPERATOR SAFETY

⚠**WARNING**

POTENTIAL HAZARD:

Traveling down excessively steep hills.

WHAT CAN HAPPEN:

Improper downhill travel could cause loss of control or overturn.

HOW TO AVOID THE HAZARD:

Never operate on hills too steep for the vehicle or for your abilities. Practice on smaller hills before attempting large hills. Always check the terrain carefully before attempting any hill. Never descend hills with excessively slippery or loose surfaces.

NOTE:

Always check the terrain carefully before descending a hill. Never travel down a hill at high speed. Avoid traveling down a hill at an angle. Travel straight down the hill when possible.

OPERATOR SAFETY

⚠**WARNING**

POTENTIAL HAZARD:

Traveling down excessively steep hills.

WHAT CAN HAPPEN:

Improper downhill travel could cause loss of control or overturn.

HOW TO AVOID THE HAZARD:

Never operate on hills too steep for the vehicle or for your abilities. Practice on smaller hills before attempting large hills. Always check the terrain carefully before attempting any hill. Never descend hills with excessively slippery or loose surfaces.

NOTE:

Always check the terrain carefully before descending a hill. Never travel down a hill at high speed. Avoid traveling down a hill at an angle. Travel straight down the hill when possible.

OPERATOR SAFETY

⚠**WARNING**

POTENTIAL HAZARD:

Improperly crossing hills and turning on hills.

WHAT CAN HAPPEN:

Improperly crossing or turning on hills could cause loss of control or overturn.

HOW TO AVOID THE HAZARD:

Use extra caution when turning on any hill. Avoid crossing the side of a steep hill.

WHEN CROSSING THE SIDE OF A HILL:

Always follow proper procedures as described in the owner's manual. Avoid hills with excessively slippery or loose surfaces.

⚠**WARNING**

POTENTIAL HAZARD:

Stalling, rolling backwards while climbing a hill.

WHAT CAN HAPPEN:

The vehicle could overturn.

HOW TO AVOID THE HAZARD:

Maintain a steady speed when climbing a hill.

IF ALL FORWARD SPEED IS LOST:

Close the throttle. Apply the brake. When fully stopped, shift the gear selector to the park position.

OPERATOR SAFETY

IF THE VEHICLE BEGINS ROLLING:

Never apply engine power. Carefully apply the foot brake while rolling backwards. When fully stopped, keep the brake applied, shift the gear selector to the parking position, and determine the best way to safely change direction.

⚠WARNING

POTENTIAL HAZARD:

Improperly operating over obstacles.

WHAT CAN HAPPEN:

Operating over obstacles could cause loss of control or overturn.

HOW TO AVOID THE HAZARD:

Before operating in a new area, check for obstacles. Avoid operating over large obstacles such as rocks and fallen trees when possible. If unavoidable, use extreme caution and always follow proper procedures as outlined in the owner's manual.

OPERATOR SAFETY

⚠**WARNING**

POTENTIAL HAZARD:

Skidding or sliding.

WHAT CAN HAPPEN:

Skidding or sliding can cause loss of control. If the tires regain traction unexpectedly, the vehicle could overturn.

HOW TO AVOID THE HAZARD:

On slippery surfaces such as ice, travel slowly and use extra caution to reduce the chance of skidding or sliding out of control.

⚠**WARNING**

POTENTIAL HAZARD:

Overloading the vehicle or carrying/towing cargo improperly.

WHAT CAN HAPPEN:

Overloading and towing can cause changes in vehicle handling, which could lead to loss of control or an accident.

OPERATOR SAFETY

HOW TO AVOID THE HAZARD:

Never exceed the stated load capacity for this vehicle.

Cargo should be properly distributed and securely attached. Reduce speed and always use low gear when carrying cargo or pulling a trailer. Allow a greater distance for braking. Always follow the instructions in the owner's manual for carrying cargo or pulling a trailer.

⚠WARNING

POTENTIAL HAZARD:

Operation the vehicle through deep or fast-flowing water.

WHAT CAN HAPPEN:

Tires may float, causing loss of traction and loss of control, which can lead to an accident or overturn.

HOW TO AVOID THE HAZARD:

Avoid operating through deep or fast-flowing water. If it is unavoidable to enter water that exceeds the recommended maximum depth, travel slowly, balance your weight carefully, avoid sudden movements, and maintain a slow and steady forward motion. Do not make sudden turns or stops, and do not make sudden throttle changes. Wet brakes may have reduced stopping ability. Always test the brakes after leaving the water. If necessary, apply the brakes several times while driving slowly to dry out the pads.

OPERATOR SAFETY

⚠**WARNING**

POTENTIAL HAZARD:

Improperly operating in reverse.

WHAT CAN HAPPEN:

The vehicle could collide with an obstacle or person, resulting in severe injury.

HOW TO AVOID THE HAZARD:

Before shifting into reverse gear, always check for obstacles or people behind the vehicle. When it's safe to proceed, back slowly.

⚠**WARNING**

POTENTIAL HAZARD:

Operating this vehicle with improper tires, or with improper or uneven tire pressure.

WHAT CAN HAPPEN:

Use of improper tires, or operation of the vehicle with improper or uneven tire pressure, could cause loss of control or an accident.

HOW TO AVOID THE HAZARD:

Always use the size and type of tires specified in the owner' s manual. Always maintain proper tire pressure.

OPERATOR SAFETY

⚠**WARNING**

POTENTIAL HAZARD:

Operating the vehicle with improper modifications.

WHAT CAN HAPPEN:

Improper installation of accessories or modification of the vehicle may cause changes in handling which could lead to an accident.

HOW TO AVOID THE HAZARD:

Never modify the vehicle through improper installation or use of accessories. All parts and accessories added to the vehicle must be genuine parts or equivalent components designed for use on this vehicle, and they should be installed and used according to approved instructions. Consult your dealer for more information.

⚠**WARNING**

POTENTIAL HAZARD:

Operating on frozen bodies of water.

WHAT CAN HAPPEN:

Severe injury or death can result if the vehicle falls through the ice.

HOW TO AVOID THE HAZARD:

Never operate the vehicle on a frozen body of water.

OPERATOR SAFETY

⚠WARNING
Leaving the keys in the ignition can lead to unauthorized use of the vehicle, resulting in serious injury or death. Always remove the ignition key when the vehicle is not in use.

⚠WARNING
After any overturn or accident, have an authorized dealer inspect the entire vehicle for possible damage, including (but not limited to) brakes, throttle and steering systems.

⚠WARNING
Safe operation of this vehicle requires good judgment and physical skills. Persons with cognitive or physical disabilities who operate this vehicle have an increased risk of overturn and loss of control, which could result in severe injury or death.

⚠WARNING
Exhaust system components are very hot during and after use of the vehicle. Hot components can cause serious burns and fire. Do not touch hot exhaust system components. Always keep combustible materials away from the exhaust system. Use caution when traveling through tall grass, especially dry grass.

Controls and Features

Primary Controls

Steering Wheel - 1

The steering wheel is located in front of the driver's seat.

Tilt Lever - 2

A tilt lever feature allows the steering wheel to be adjusted to fit the operator. Pull down on the lever and adjust the steering wheel tilt angle for comfort. Push up on the lever to lock the steering wheel tilt angle.

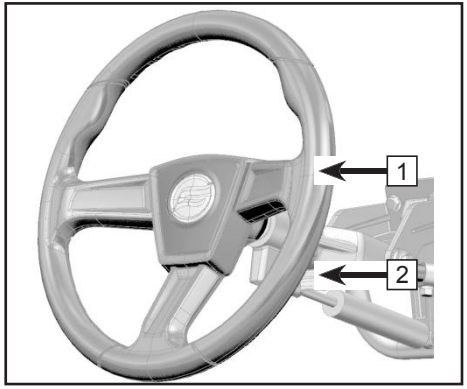

CONTROLS AND FEATURES

Throttle Pedal - (3)

The throttle pedal is located to the right of the brake pedal. The throttle pedal controls engine rpm and vehicle speed. To control vehicle speed, press on the throttle pedal with your right foot. Always check the pedal function before driving.

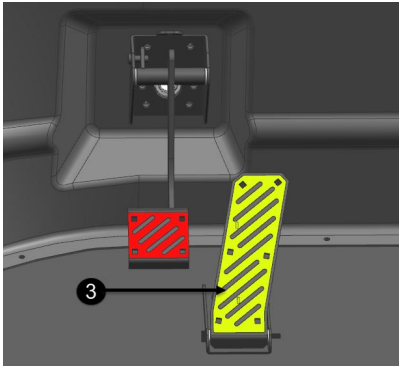

The throttle has the following functions:

1. Starting protection function: The vehicle can start directly on N and P gear, and should apply foot brake at the same time while it is on the L or H gear.
2. Reverse override function: The vehicle speed is limited to 25km/h while it is in reverse gear.
3. 4WD-LOCK function: Turn the switch to 4WD-LOCK mode, the vehicle speed is limited to 35km/h. Depress the override button can remove the speed limitation.
4. Idling function: When the vehicle is in N gear, engine RPM is limited to 5000rpm.
5. Brake priority function: When the driver applies both brake pedal and throttle pedal at the same time, the electronic throttle valve will shut off the engine and go back to idle automatically.
6. Limp home function: When a fault of the electronic throttle body or electronic throttle pedal is detected, the system will enter into torque limitation or limp home mode. When faults from electronic throttle body, the engine will enter into torque limitation and RPM turns back to be idling state. When faults from electronic throttle pedal, the vehicle will enter into limp home mode, the top RPM will be less than 5000rpm.

CONTROLS AND FEATURES

Brake Pedal - 4

The brake pedal is located to the left of the throttle pedal. Release the throttle pedal and press the brake pedal with your foot to slow or stop the vehicle.

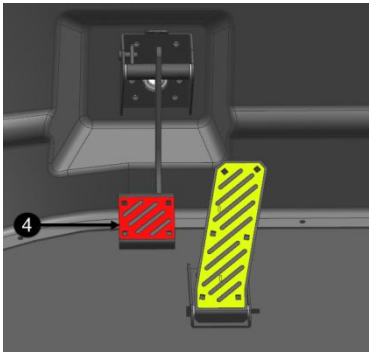

Shift Lever - 5

The shift lever is located to the right of the driver's seat. The shift lever is used to change the transmission gear selection:

Press the brake pedal before gear shifting, to ensure personnel safety.

L – Low Gear. The low speed range of the gearbox. It allows the vehicle to move slowly with maximum torque at the wheels.

CAUTION: To avoid damage to the CVT system, always use low gear for constant slow travel, to pull a trailer, carry heavy cargo, go over obstacles, or drive up and down hills.

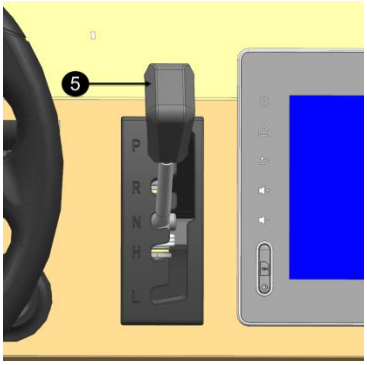

H – High Gear. The high speed range of the gearbox. It is the normal driving speed range. It allows the vehicle to reach its maximum speed.

N – Neutral. In neutral position the engine power take-off is disengaged.

R – Reverse. The reverse gear position allows the vehicle to go backwards.

P – Park. The park position locks the gearbox to help prevent vehicle movement.

NOTE:

In reverse operation, the engine's RPM is limited, thus limiting the vehicle reverse speed under 15.5 mph (25 km/h).

⚠WARNING
Use extreme caution driving downhill in reverse. Gravity can increase the vehicle speed above the set limited reverse speed.

⚠WARNING
Always shift to PARK (P) position when the vehicle is not in operation. The vehicle can roll if the shift lever is not set to 'P'. Always use the auxiliary hand brake as an additional precaution to prevent vehicle movement.

Secondary Controls

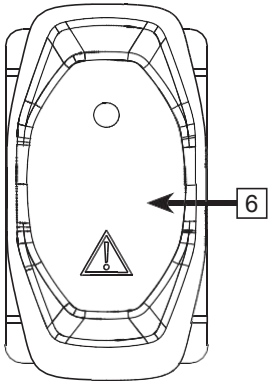

Speed Limit Override Switch - 6

The engine is normally speed limited when operating in 4WD-LOCK. If conditions require more engine power:

- Release the throttle and press the button to override the speed limiting function. The override indicator light will come on.
- Reapply the throttle while this button is pressed.
- Releasing the button restores the speed limiting function.

NOTE: Speed limit override is not available in 2WD.

⚠WARNING
Pressing the override button while the throttle is open in speed limiting mode may cause sudden acceleration, resulting in a loss of control, severe injury, or death. Always release the throttle before pressing the override button.

CONTROLS AND FEATURES

Main Light Switch - 8

The main light switch consists of 3 positions. Turn the switch to select the following functions:

	When the switch is at this position, head light, position light, tail light and instrument light are on .
	When the switch is at this position,daytime running light, tail light, and front position light are on.
○	When the switch is at this position, only daytime running light is on and all lights are off

Low Beam / High Beam

	High Beam is selected when the switch is turned to this position.
	Low Beam is selected when the switch is turned to this position.

NOTE:

Ignition key must be turned to 'ON' before operating head lights.

CAUTION
Do not use the headlights with the engine turned off for more than 15 minutes. The battery may discharge to a point that the starter motor will not operate properly. If this should happen, remove the battery and recharge it.

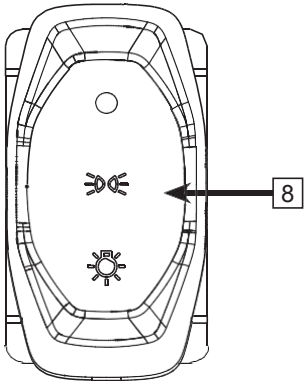

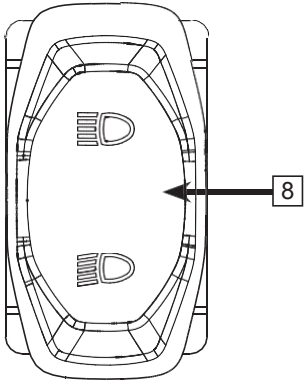

CONTROLS AND FEATURES

Horn Switch - 9

Press this button, the horn will sound.

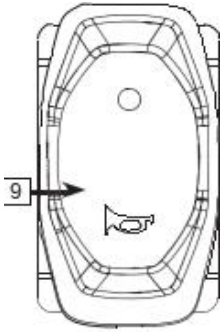

2WD / 4WD Switch - 11

This vehicle is equipped with an on-command “2WD”/”4WD” and front diff-lock “LOCK”/”4WD” switch on the left side of the dashboard. Select the appropriate drive mode according to terrain and conditions:

Two-wheel drive (2WD): Power is supplied to the rear wheels only.

Four-wheel drive (4WD): Power is supplied to the rear wheels, and to the front wheels.

Four-wheel drive with diff-lock (4WD-LOCK): Power is supplied to the rear and front wheels and the front differential is locked. Unlike 4WD mode, all the wheels turn at the same speed. Speed is limited to 22 mph (35 km/h).

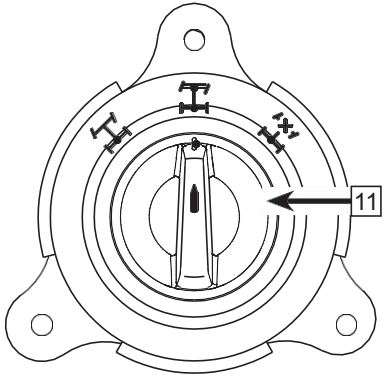

CAUTION
The vehicle must be stopped to engage or disengage 2WD/ 4WD and 4WD-LOCK. Mechanical damage may occur if the switch is engaged or disengaged while driving.

CONTROLS AND FEATURES

On-Command 2WD / 4WD / 4WD-LOCK Switch Operation

To change from 2WD to 4WD: Stop the vehicle. Turn the switch from left to middle.

The 4WD indicator " " on dashboard light up.

To change from 4WD to 2WD: Stop the vehicle. Turn the switch from middle to left.

The 2WD indicator " " on dashboard light up.

To change to 4WD-LOCK: Stop the vehicle. Turn the switch from middle to right.

The 2WD/4WD diff-lock " " on dashboard light up.

NOTE: 4WD-LOCK OPERATION:

Steering will require greater effort in 4WD-LOCK mode.

When the switch is set to "LOCK", the front diff-lock indicator light will flash until the front differential is locked. If the indicator light is flashing, turning the steering left and right will help the front gear locking mechanism to engage.

Riding before the front differential lock is properly engaged (e.g., the indicator light is flashing) will cause the engine speed to be limited until engagement is complete.

When the vehicle is in 4WD-LOCK, the maximum traveling speed is limited to 22 mph (35 km/h).

If conditions require full engine power to be available, press the override switch on the dashboard to disable the 4WD-LOCK speed limiter.

Hand Brake - 13

This vehicle is equipped with an auxiliary hand brake, which is located to the left of the steering wheel. Pull back on the lever to apply the rear brakes and prevent the vehicle from rolling when parked on an incline.

To release the hand brake, pull up slightly and press the release button at the end of the lever, then push the lever down to its original position.

⚠CAUTION
Never depend on the transmission parking feature alone if the vehicle is parked on a hill. Always apply the hand brake and block the wheels on the downhill side of the vehicle to prevent movement. It is recommended to park the vehicle on level ground.

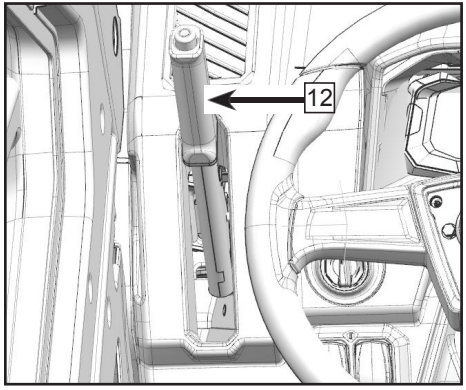

CONTROLS AND FEATURES

Vehicle Features

Feature Locations - 1

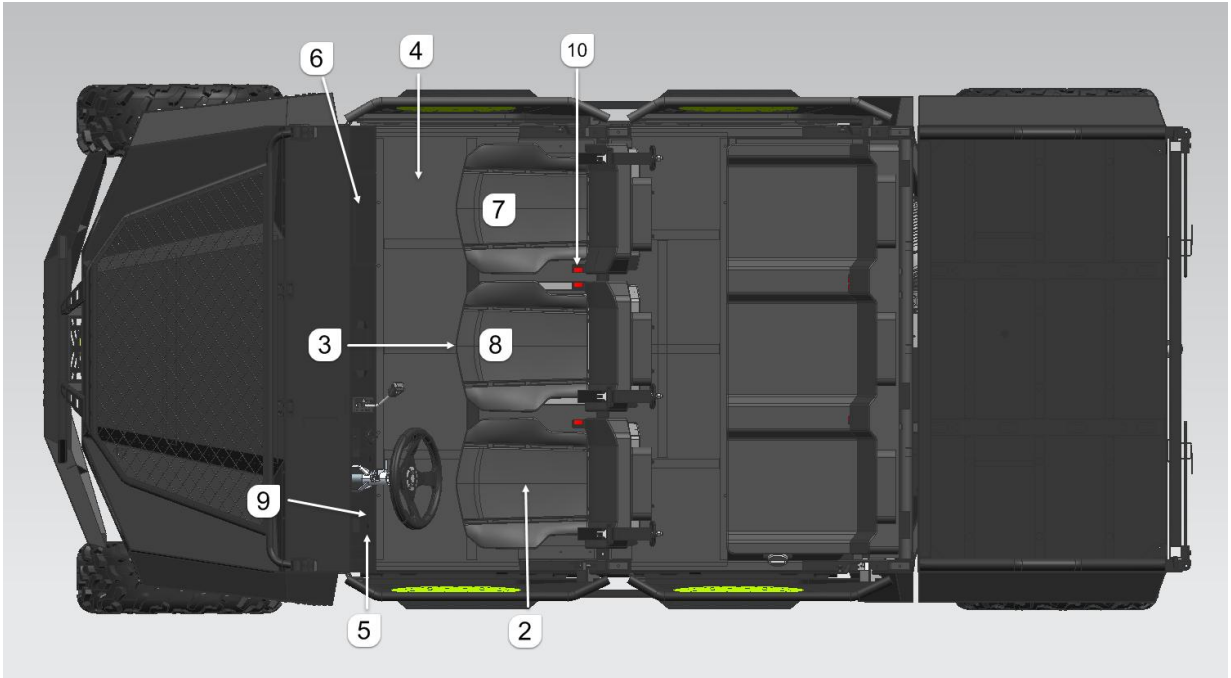

CONTROLS AND FEATURES

Feature Locations – 2

Feature Locations - 3

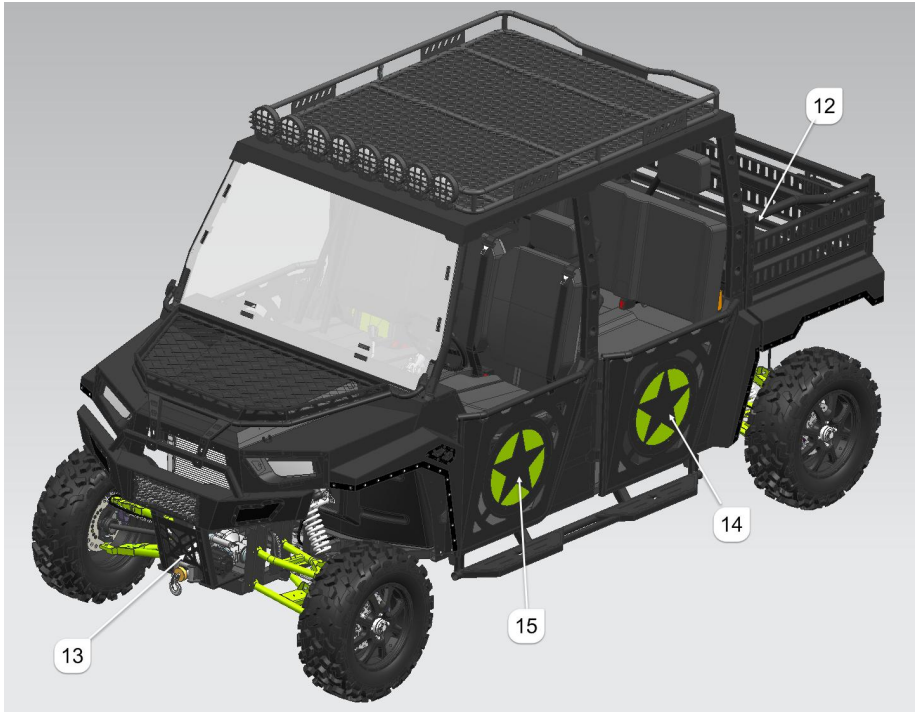

CONTROLS AND FEATURES

Feature Descriptions

Anchoring Hooks - 1

12 anchoring hook points are located inside the cargo area to secure cargo inside the cargo box.

Driver Seat - 2

The driver's seat offers fore and aft adjustment. To adjust the seat, turn the lever to unlock it. Release the lever to lock the seat into desired position. A pull strap at the back of the seat allows the seat to tilt forward for maintenance.

Driver's Seat Storage - 3

This vehicle is equipped with a storage box under the driver's seat made to carry light objects. A pull strap at the back of the seat allows the seat to tilt forward for access.

Footrests - 4

This vehicle is equipped with driver and passenger footrests to allow firmly planting of feet on the vehicle floor, which helps minimize the risk of leg or foot injury and maintain proper body position while riding. Always wear appropriate footwear.

Hand Brake - 5

Press the release button and pull up lever to engage the hand brake. Press the release button and push down to disengage the hand brake before driving.

Portable storage - 6

This vehicle is equipped with an enclosed storage box on the dashboard made to carry the winch controller and light objects.

CONTROLS AND FEATURES

Passenger's seat storage - 7

A storage box with basic tools is provided. It is typically stored under the passenger seat.

Passenger Seat - 8

The bench seat is not adjustable. Seat back and seat bottom can be removed when necessary for maintenance or access to storage.

Winch Control Power Port - 9

This vehicle is equipped with a wired winch controller and power port, which can be designated for use if the wireless winch control is not working. The power port is located on the lower left side of the steering wheel.

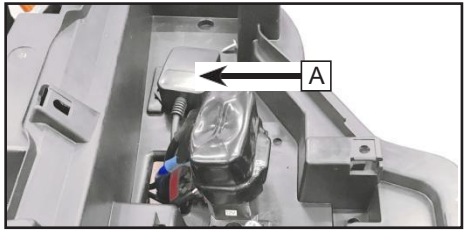

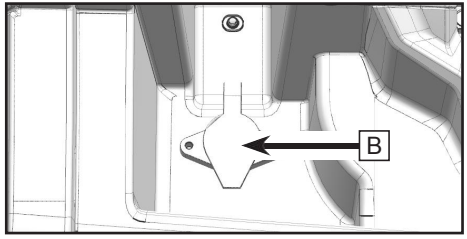

A	Receiver, wireless winch control	B	Switch seat, winch power port

Seat Belts - 10

This vehicle is equipped with 3-point seat belts to help protect the driver and passenger in the event of collisions, rollovers or tip-overs and to help keep occupants in the cab. The seat belt indicator light will flash if the seat belt is not fastened during driving.

Shoulder Guards - 11

The vehicle is equipped with shoulder guards to help restrain the body of the driver and passenger inside vehicle.

Cargo Box and Tilt Feature - 12

Refer to the safety decals on the cargo box for load information. The cargo box has a release handle on each side that can be used to tilt the box for maintenance or to dump material.

Winch - 13

This vehicle is equipped with a 3500-lb winch. A wireless remote control and a standard winch controller is located in the glove compartment. The winch controller power port is under the hood. To preserve battery power, only operate the winch while the engine is running. Please refer to the winch operation section of this manual for further information or consult with your dealer on the use of the winch before using your vehicle.

Fuel Tank Fill Cap - 14

The fuel tank fill cap is located at the driver side of the vehicle near the driver seat. To fill the tank, grasp the fuel cap firmly, then turn counter-clockwise and remove it. Reinstall the fuel cap securely after a fuel tank fill is completed. The fuel tank capacity is 10.57 gal. (40L).

Side Doors - 15

Side doors are provided on each side of the cab to help arms, legs or shoulders stay inside the vehicle, thus reducing the risk of injuries. (If equipped - available in select countries)

CONTROLS AND FEATURES

Towing - 17

This vehicle is equipped with a 2 in. x 2 in. (51 mmx 51 mm) box size standard hitch support, a trailer light receptacle in the right rear inner fender well of the vehicle, and a trailer wiring adapter. Please consult with your dealer on towing and the use of trailers before using your vehicle.

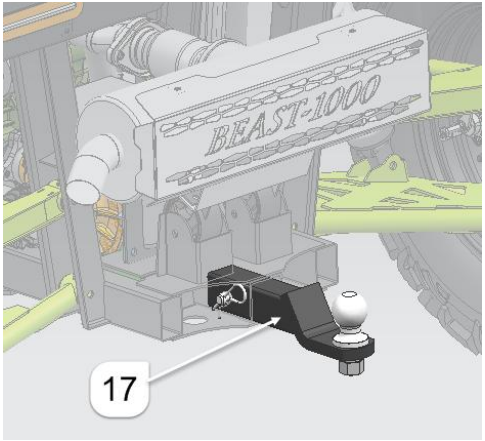

Extra Vehicle Features

12 Volt Accessory Power

Auxiliary 12Vdc power and USB outlets are provided on the right side of the dashboard for operating accessories such as hand-held spot lights and charging electronic devices. Please consult with your dealer on the use of powered accessories with your vehicle.

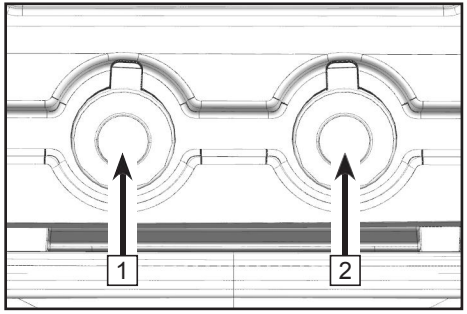

1	12 Volt Accessory Power	2	USB

CONTROLS AND FEATURES

Wireless Winch Remote Control (1)

This vehicle is equipped with a wireless remote control for operation of the winch system. The wireless remote control is typically stored in the glove box on the passenger side of the dashboard.

To enable the wireless remote control: Press both control buttons at the same time. The indicator light will illuminate, and the controller can be used.

To disable the wireless remote control: Press both control buttons at the same time. The controller and indicator light will turn off.

Wired Winch Cable Controller (2) and Power Port

This vehicle is equipped with a wired winch controller, which can be designated for use if the wireless winch control is not working. The power port is located on the lower left side of the steering wheel.

Brake Fluid Reservoir and Level Indicator

Brake master cylinder reservoir level can be viewed under the front access cover. Check the brake master cylinder fluid level before each use of the vehicle. If the fluid level is lower than the “low” mark, determine the cause or refill with brake fluid as necessary.

NOTE:

When checking the fluid levels, the vehicle must be on level ground. If the fluid level is lower than the “lower” mark, add DOT4 brake fluid. Do not overfill.

⚠WARNING
An over-full master cylinder may cause brake drag or brake lockup, which could result in an accident causing serious injury or death. Maintain brake fluid at the recommended level. Do not overfill.

⚠WARNING
Never store or use a partial bottle of brake fluid. Brake fluid is hygroscopic, meaning it rapidly absorbs moisture from the air. The moisture causes the drop of boiling temperature of the brake fluid, which can lead to early brake fade and the possibility of accident or severe injury. After opening a bottle of brake fluid, always discard any unused portion.

CVT System

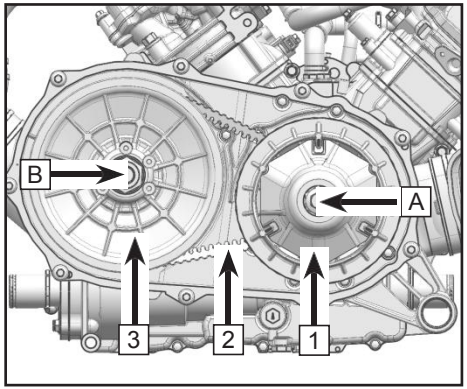

This vehicle has a Continuously Variable Transmission (CVT) system that utilizes a drive belt and clutch pulleys to automatically vary transmission drive ratios, allowing infinite variability between the highest and lowest vehicle speeds with no discrete steps or shifts.

The CVT system consists of a primary clutch (1), which is an advanced form of centrifugal clutch that is mounted to the engine crankshaft (A).

The secondary clutch (3) is mounted to the input shaft of the transmission (B) and serves two functions; As a “slave” pulley to the primary clutch, and to provide a torque sensing element that shifts drive ratios. The drive belt (2) is a heavy duty V-belt that connects the engine and transmission clutch pulleys.

A CVT housing and cover encloses the clutches and belt assembly. There are inlet and outlet cooling ducts that route air to cool the components, and they should be regularly inspected. The CVT components do not contain any user maintenance items. Contact your dealer for service.

Engine Braking System (EBS)

(Only for Australia market)

This vehicle is equipped with an engine braking system. The CVT primary clutch mounted to the engine crankshaft contains a one-way bearing that creates engine braking, which occurs when the throttle is completely closed, the engine is below the primary clutch engagement RPM, and the vehicle is at speed. It uses the engine's compression/resistive force to slow the over-driving transmission speed via the CVT drive belt, thereby slowing the entire vehicle gradually.

Engine braking is always active, and offers the most benefit when:

Used in conjunction with 4WD and 4WD Diff-Lock Modes.

Descending steep or slippery hills.

Descending rocky downhill terrain. Slowing

while towing heavy loads. Assisting normal

brake system application.

EBS is not a substitute for the vehicle brake system, although increased brake pad and disc life are realized when EBS assists normal brake system operation. The EBS is non-adjustable, and does not contain any user maintenance items. Contact your dealer for service.

How To Avoid CVT Drive Belt and Component Failure

CVT clutch and belt life can be dramatically extended by avoiding these common operating mistakes:

Causes CVT damage:	Solution:
Attempting to load the vehicle onto a truck bed or tall trailer in high gear.	Shift transmission to low gear during loading of the vehicle to prevent belt burning.
Starting out on a steep incline in high gear.	When starting out on steep inclines, use low gear.
Constant driving at low RPM, driving at just above clutch engagement RPM, or at low speed (approximately 3mph~7mph [5km/h~10km/h]) in high gear.	Low gear is highly recommended for cooler CVT operating temperatures and longer component life. Drive at a higher speed or use low gear more frequently.
Insufficient warm-up of CVT exposed to low ambient temperatures	Warm the engine before driving, the CVT drive belt will become more flexible and prevent belt burning.
Slow throttle and easy CVT engagement.	Use the throttle with purpose and effectively for efficient CVT clutch engagement.
Towing/pushing at low RPM/low ground speed.	Use low gear only.
Utility use/plowing snow, dirt, etc.	Use low gear only.
Heavy vehicle load operating at low speed	Use low gear only.

Causes CVT damage:	Solution
Stuck in mud or snow.	Shift the transmission to low gear, and carefully use fast, aggressive throttle application to engage CVT. WARNING: Excessive throttle may cause loss of control and vehicle overturn.
Climbing over large objects from a stopped position.	Shift the transmission to low gear, and carefully use fast, brief, aggressive throttle application to engage the CVT. WARNING: Excessive throttle may cause loss of control and vehicle overturn.
Belt slipping from water or snow ingestion into the CVT system.	Drain the water from the CVT housing and dry the CVT if possible, or contact your dealer.
Overheating of the CVT components causes malfunction.	Contact your dealer for inspection and repair of the CVT components.

CONTROLS AND FEATURES

Dashboard Indicators and Warnings

1	Bluetooth indicator	7	Call indicator	13	Adjusting Button	19	Override indicator	25	EFI Fault Indicator
2	Engine RPM	8	Turning light	14	Clock	20	Brake Fault Warning Indicator	26	Neutral Pilot Lamp
3	Drive Method	9	Parking Brake Indicator	15	Fuel Gauge	21	Seat belt warning light		
4	Mode Display	10	Oil Pressure Signal Indicator	16	Daytime running lamp indicator	22	Odometer		
5	Speedometer	11	High-beam light indicator	17	OPC Indicator	23	Voltage Display		
6	Coolant Temperature	12	Position light indicator	18	EPS Fault Warning Indicator	24	Gear Position Display		

CONTROLS AND FEATURES

Dashboard

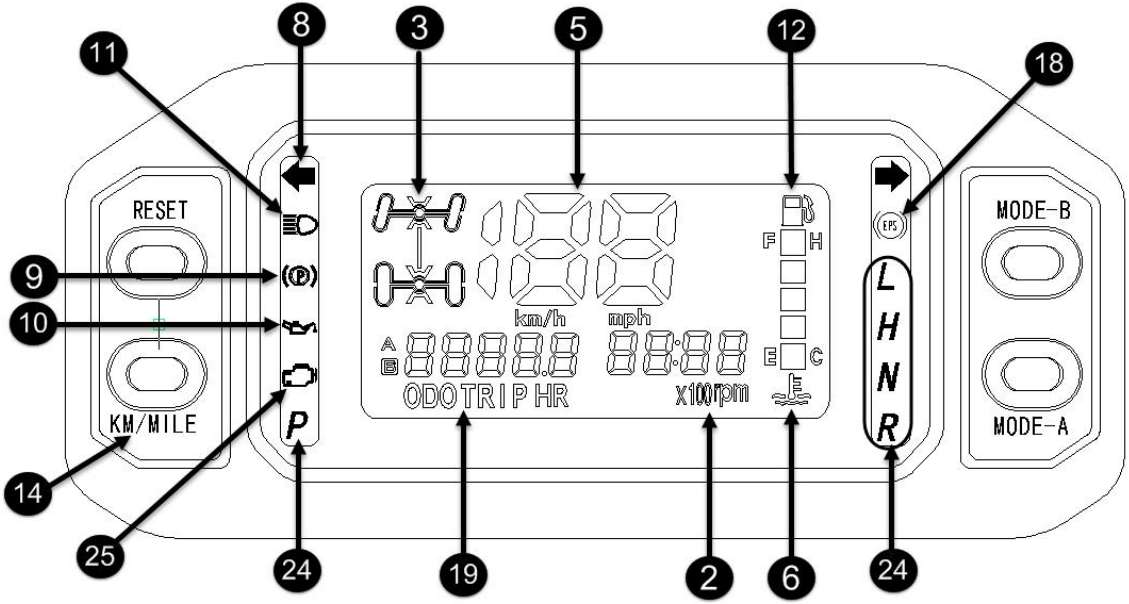

CONTROLS AND FEATURES

Dashboard

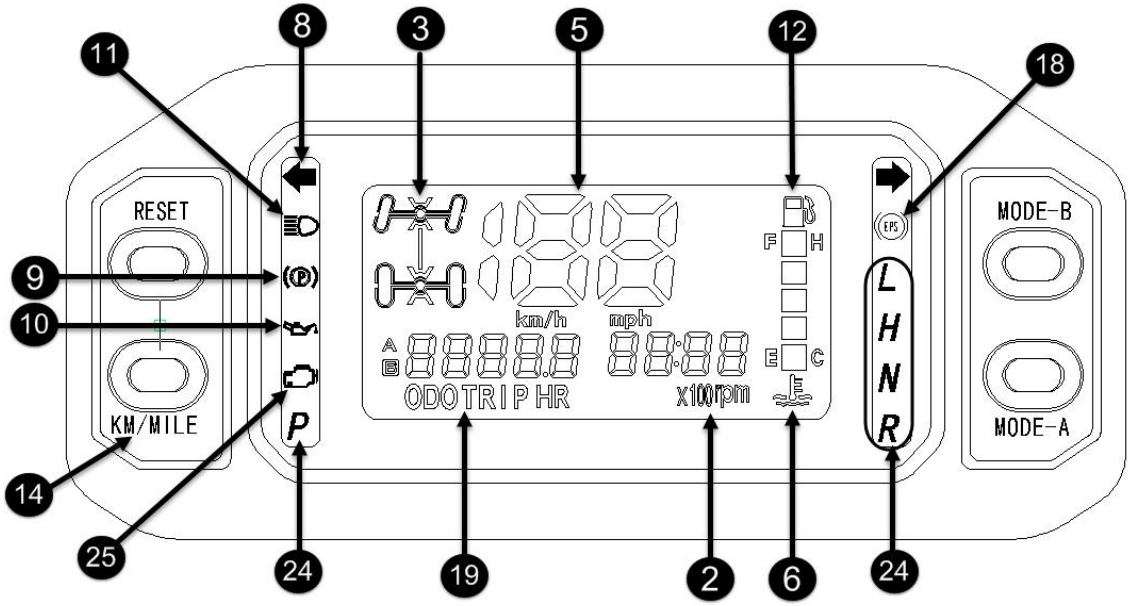

Dashboard Indicators and Warnings

Engine RPM - 2

Indicate the engine current RPM.

Drive Method - 3

It indicates 2WD, 4WD or 4WD-LOCK drive method chosen.

Speedometer - 5

Speedometer. This dashboard section can be toggled to display the vehicle speed in Kilometers per hour (km/h) or Miles Per Hour (MPH).

CONTROLS AND FEATURES

Coolant Temperature - 6

This dashboard section displays the current coolant temperature, ‘C’ is low temperature, ‘H’ is high temperature. Both over-low and over-high are abnormal. Idle the vehicle to warm the engine when it’s too cold, and park the vehicle when it’s too hot to prevent the coolant from boiling. Keep the coolant temperature in a normal range.

Turning Light - 8

If equipped.

Parking Brake Indicator - 9

This indicator displays when parking brake function is activated.

Oil Pressure Signal Indicator - 10

If Oil Pressure Signal Indicator is on. There might be something wrong with the oil system. Please have your vehicle serviced.

High-beam light indicator - 11

This indicator illuminates when the headlight switch is in this position.

Adjusting Button - 14

Set the selected function with SEL / ADJ buttons.

Fuel Gauge - 15

Indicates the fuel level in the fuel tank. “F” indicates the fuel level is about 40 L. When fuel gauge is in red zone, the residual fuel in the fuel tank is about 3 L. Refuel in this case.

EPS Indicator - 18

This indicator light flashes when a fault occurs in the Electronic Power Steering system.

Seat belt warning light - 21

Seatbelt Reminder. This indicator displays when the seat belt is not fastened. When latch plate is not pushed into the buckle, indicator on the dashboard will be on and vehicle speed will be restricted to 25km/h; When the latch plate is pushed into the buckle, indicator on the dashboard will be off and vehicle speed limiting feature is disabled.

Odometer - 22

Displays the total mileage or trip mileage the vehicle has traveled. Total mileage or trip mileage can be shifted by using SEL button.

Voltage Display - 23

It displays battery voltage.

Gear position light - 24

This indicator displays gear position when the transmission is in Low (L), High (H), Neutral (N), Reverse (R) or Park (P).

EFI Fault Indicator - 25

This indicator displays when a fault occurs in the Electronic Fuel Injection system.

Neutral Pilot Lamp - 26

This indicator displays when the transmission is in Neutral.

CONTROLS AND FEATURES

TFT Dashboard Settings/Adjustments

State	Display	SET	ADJ	Operation	Result
Display shifting	Engine RPM	Short press		Shift to trip	TRIP
	TRIP	Short press		Shift to engine hour	Engine hour
			Long press	Trip resets to be zero	TRIP
	Engine Hours	Short press		Shift to dashboard brightness	Dashboard brightness
	Dashboard brightness	Short press		Shift to engine RPM	Engine RPM
Dashboard brightness	Home interface		Short press	Adjust dashboard brightness 1→5→1	Home interface
Time setting, time format shifting, speed unit shifting	Home interface	Long press		Shift to hour setting	Hour setting interface
	Hour setting	Short press		Shift to minute setting	Minute setting interface
			Short press	Hour number add 1 by every press	Hour setting interface
	Minute setting	Short press		Shift to time format setting	Time format setting interface
			Short press	Minute number add 1 by every press	Minute setting interface
	Time format setting	Short press		Shift into speed unit setting	Speed unit shifting interface
			Short press	Shift between 12/24 hours display	Time format setting interface
	Speed unit	Short press		Exit from setting mode	Home interface
			Short press	Shift to speed unit	Speed unit shifting interface
Calling	Incoming calls	Short press		Accept the call	In a call
			Short press	Refuse the call	Home interface
	In a call		Short press	Finish the call	Home interface

Operating Your Vehicle

Break-In Period

The break-in period for a new engine is very important. Careful treatment of a new engine at the beginning of ownership will result in more efficient performance and longer life. Perform the following procedures carefully:

1. Select an open area that allows room to familiarize yourself with vehicle operation and handling.
2. Place the vehicle on a level surface.
3. Fill the fuel tank with gasoline.
4. Check the engine oil level. Add the recommended oil if necessary to maintain the oil level between the minimum and maximum indicators on the dipstick.
5. Position yourself in the operating position on the vehicle, fasten the seatbelt and safety nets or side doors, and start the engine. Allow the engine to idle for a short period before operating.
6. Press the foot brake, select the desired gear, and then release the foot brake.
7. Apply throttle. Drive slowly at first, varying throttle positions not more than ½ throttle for 10 hours or 100 miles, then another 10 hours or 100 miles of not more than ¾ throttle (whichever interval arrives first). Do not operate at sustained idle or sustained wide open throttle.
8. Do not pull or carry any heavy loads during the break-in period.
9. Periodically check coolant level, controls, etc. Along with the items outlined in the periodic maintenance chart.
10. At the end of the break-in period, change the oil and filter (20 hours or 200 miles / 320 km).

OPERATING YOUR VEHICLE

⚠CAUTION

During the break-in period:

- Do not operate at sustained full throttle. Damage to engine parts or decrease engine life may result if excessive wide open throttle is used during the first 20 hours of use.
- Do not run engine with throttle over 1/2 open during the first 10 hours (or 100 miles/160km) of use.
- Do not run engine with throttle over 3/4 open during the first 10 to 20 hours (or the second 100 miles/160km) of use.
- Do not haul or tow heavy cargo.
- Use of any oil other than those recommended may cause serious engine damage. We recommend the use of 10W-40 for 4-stroke engines. Changing engine oil viscosity to 5W-40 due to extreme cold environments or 15W-40 due to hot environments is acceptable. Reference the chart below for ambient temperature and viscosity choice.

Recommended Engine Oil Viscosity

Oil Viscosity				15W-40				
				10W-40				
				5W-40				
F°	-22	-4	14	32	50	68	86	104
C°	-30	-20	-10	0	10	20	30	40

OPERATING YOUR VEHICLE

Pre-Ride Inspection

Before each use of the vehicle, a best practice is to complete the pre-ride inspection checklist.

⚠WARNING
If a proper inspection is not done before each use, severe damage to the vehicle, severe injury, or death could result. Always inspect the vehicle before each use to ensure it is in proper operating condition.

Throttle

Before starting the engine, check the throttle pedal to be sure it is operating smoothly. Make sure it returns to the idle position as soon as the pedal is released. Regulate the speed of the vehicle by varying the throttle position. Because the throttle pedal is an electrically operated mechanism controlled by an ECU, the vehicle will decelerate and the engine should return to idle speed any time your foot is removed from the throttle pedal.

Foot Brake

Before operating the vehicle, push down on the pedal to apply the front and rear brakes. When pressed, the lever or pedal should feel firm. A soft brake pedal would indicate a possible fluid leak or low master cylinder fluid level, which must be corrected before riding. Contact your dealer for proper diagnosis and repairs.

OPERATING YOUR VEHICLE

Starting the Engine

⚠WARNING
Never run an engine in an enclosed area. Engine exhaust contains poisonous carbon monoxide and can cause loss of consciousness, resulting in severe injury or death.

Starting a cold engine

1. Verify the gear selector is shifted to the Parking or Neutral position.
2. Apply the foot brake.
3. Turn the engine stop switch and main key switch to " " (ON).
4. Verify the throttle is completely closed, then turn the key start switch.
5. Once the engine starts, continue to warm the engine for a short period before operating the vehicle.

NOTE:

Do not activate the starting system more than 10 seconds on each attempt. If the engine fails to start, release the start switch, pause a few seconds before the next attempt, then try the start switch again. Each attempt should be as short as possible to preserve battery energy.

The engine should only be started when the vehicle is at the neutral gear or parking gear.If the neutral indicator light on the dashboard does not come on when the gear selector is in the neutral position, contact your dealer to inspect the indicator electrical circuit or adjust the gear shifting system.

CAUTION
Allow the engine to warm up for a short period before operating the vehicle. Operating the vehicle immediately after starting could cause engine damage.

Shifting the Transmission

CAUTION
To avoid transmission damage, return the throttle to the closed position, stop the vehicle, and apply the foot brake before shifting.

NOTE:

Low gear is the preferred transmission gear selection for all forward motion other than prolonged high speed travel.

Shifting Out of Park

1. Verify the throttle is closed.
2. Apply the foot brake and press the gear selector button.
3. Shift to the desired gear by moving the gear selector along the shift guide.

Shifting: Neutral to High Gear

1. Verify the throttle is closed and the vehicle is stopped completely.
2. Apply the foot brake.
3. Shift to ‘H’ by moving the gear selector along the shift guide.

Shifting: High Gear to Low Gear

1. Verify the throttle is closed and the vehicle is stopped completely.
2. Apply the foot brake.
3. Shift to ‘L’ by moving the gear selector along the shift guide.

Shifting: Low Gear to High Gear

1. Verify the throttle is closed and the vehicle is stopped completely.
2. Apply the foot brake.
3. Shift to ‘H’ by moving the gear selector along the shift guide.

Shifting: to Reverse Gear

1. Verify the throttle is closed and the vehicle is stopped completely.
2. Apply the foot brake and press the gear selector button.
3. Shift to ‘R’ by moving the gear selector along the shift guide.
4. Check behind you for people or obstacles, then release the rear brake pedal.
5. Apply the throttle lever gradually and continue to watch behind you while moving backward.

⚠WARNING
Before shifting into reverse, make sure there are no obstacles or people, and the area is safe behind you. When it is safe to proceed, go slowly. **Avoid excessive throttle operation while in speed limit mode, as it may cause fuel to build in the exhaust, resulting in engine popping and/or engine damage.**

Shifting: to Park

1. Verify the throttle is closed and the vehicle is stopped completely.
2. Apply the foot brake and press the gear selector button.
3. Shift to ‘P’ by moving the gear selector along the shift guide. Shake the vehicle forward and backward to verify that parking is engaged.

NOTE:

- The gear shift indicators should display corresponding to the actual gear position, if the indicator does not display, ask your dealer to inspect the vehicle electrical circuit or adjust the gear shifting system.
- Due to the synchronizing mechanism in the engine, an indicator may not display until the vehicle starts moving.
- Do not use high gear for continuous slow speed travel or towing, as this can lead to excessive heating of the clutch system, which may damage components.

Safe Operation - Driving Safely

Responsibilities of the Operator

As the operator of this vehicle, your common sense, judgment, and abilities are the only factors that will prevent injury to yourself, to others around you, and/or damage to the vehicle or environment.

Recreational, Group, and Distance Riding

One of the benefits of this vehicle is that it can take you off-road away from most communities. Stay away from areas designated for other types of off-road use unless it is specifically allowed. This includes snowmobile trails, equestrian trails, cross-country ski trails, mountain bike trails, etc. Join a local ATV club. A club can provide you with a map and advice, or inform you about areas where you can ride.

Always keep a safe distance from other riders ahead of you and behind you when riding in a group. Never operate carelessly or make unexpected maneuvers with other vehicles close by. Stay on designated trails and riding areas, and discourage others from operating in unauthorized locations.

Avoiding Accidents, Rollovers and Tip-overs

Side-by-side vehicles handle differently from other vehicles. Side-by-side vehicles are designed to handle off-road terrain (for example, the wheel base and track width, ground clearance, suspension, drive train, tires, etc.) and as a result, can overturn in situations where vehicles designed for use primarily on paved or smooth terrain may not.

SAFE OPERATION - DRIVING SAFELY

A rollover or other accident can occur quickly during abrupt maneuvers such as:

- Sharp turns or hard acceleration.
- Deceleration when turning.
- When driving on hills or over obstacles.

Abrupt maneuvers or aggressive driving can cause rollovers or loss of control even in flat open areas. If the vehicle rolls over, any part of your body (such as arms, legs, or head) outside of the cockpit can be crushed and trapped by the cage or other parts of the vehicle. You can also be injured by impact with the ground, cab, or other objects.

To reduce the risk of rollovers:

- Use care when turning.
- Adjust steering inputs accordingly to your speed and environment.
- Slow down before entering a turn.
- Avoid hard braking during a turn.
- Avoid sudden or hard acceleration when turning, even from a stop or low speed.
- Never attempt donuts, skids, slides, fishtails, jumps, or other stunts.
- If vehicle starts to skid or slide, steer in the direction of the skid or slide.
- Never slam the brakes and lock the wheels.
- This vehicle is built primarily for OFF-ROAD purposes. Riding on paved surfaces may seriously affect vehicle handling and control. If you must drive on paved surfaces for a short distance, reduce speed and avoid abrupt inputs to steering wheel, accelerator and brake pedals.

SAFE OPERATION - DRIVING SAFELY

This vehicle can roll over sideways, or tip over forward or backwards on slopes or uneven terrain:

- Avoid side hilling (driving along the slope rather than up or down a hill). When possible, drive straight up and down inclines rather than across them. If you must side hill, use extreme caution and avoid slippery surfaces, objects, or depressions. If you feel the vehicle start to rollover or slide sideways, steer downhill if possible.
- Avoid steep hills and follow procedures in this manual for climbing and descending hills.
- Sudden changes in terrain such as holes, depressions, banks, softer or harder ground or other irregularities may cause the vehicle to tip or become unstable. Observe the terrain ahead and slow down in areas of uneven terrain.

This vehicle will handle differently when carrying or pulling a load:

- Reduce speed and follow instructions in this manual for carrying cargo or pulling a trailer.
- Avoid hills and rough terrain.
- Allow more distance to stop.

Be prepared in case of rollover:

- Latch side doors or side nets and fasten seat belts to help you avoid sticking out arms or legs.
- Never grab the cage while riding. Hands can be crushed between the cage and the ground in a rollover. Keep hands on the steering wheel or handhold.
- Never try to stop a rollover using your arms or legs. If you think that the vehicle may tip or roll, the driver should keep both hands on the steering wheel and both feet firmly planted on the floor. The passenger should keep both hands on the handhold and both feet firmly planted on the floor.

SAFE OPERATION - DRIVING SAFELY

Avoiding Collisions

At higher speeds, there is an increased risk of losing control, particularly in challenging off-road conditions, and the risk of injury in a collision is greater. Never operate at excessive speeds. Always go at a speed that is proper for the terrain, visibility, and operating conditions, and your experience. This vehicle does not have the same kind of protection for collisions as a car; for example, there are no air bags, the cab is not fully enclosed, and it is not designed for collisions with other vehicles. Therefore, it is particularly important to fasten seat belts, latch side doors or side nets, and wear proper riding gear.

Environment

Off-road recreation is a privilege. Maintain your privilege by respecting the environment and the rights of others to enjoy it:

- Chasing wildlife is illegal. Wildlife can die of exhaustion if chased by a motorized vehicle.
- Never purposely damage the terrain unless the operating area is designated for that type of activity.
- Observe the rule…”what you take in, carry out”. Do not litter.

Practice Exercises

Before you go out for a ride, it is very important to familiarize yourself with the handling of your vehicle by practicing in a controlled environment. Find a suitable area to practice and perform the following exercises. It should be at least 147x147 ft. (45x45 m), and free of obstacles like trees and large rocks.

Remember: Avoid higher speeds until you are thoroughly familiar with the operation of your vehicle.

NOTE:

Low gear is the preferred transmission gear selection for all forward motion other than prolonged high speed travel. Do not use high gear for continuous slow speed travel or towing, as this can lead to excessive heating of the clutch system, which may damage components.

Turning Exercise

Turning is one of the most frequent causes of accidents. It is easier for the vehicle to lose traction or rollover if you turn too sharply, or go too fast. Slow down when you approach a turn.

Practice turning:

- First, learn how to perform slight right turns at very low speeds. Release the throttle before turning and slowly reapply the throttle.
- Repeat the turning exercise, but this time maintain the throttle at the same level while turning.
- Finally, repeat the turning exercise while accelerating slowly.
- Practice exercises turning to the left.

Note how your vehicle reacts in these different exercises. BMSMOTOR recommends releasing the throttle before entering a turn to help initiate directional change. You will feel the lateral force increasing with the speed and with your steering input. The lateral force should be maintained as low as possible to make sure it does not cause the vehicle to roll over.

U-turn Exercise

Practice doing U turns:

- Accelerate slowly and while remaining at low speed, gradually turn the steering wheel to the right until you have completed the U-turn.
- Repeat U-turn exercise with different steering inputs and always at a very low speed.
- Repeat U turn exercise to the left.

As mentioned before in this manual, do not ride on paved surfaces. The vehicle behavior will not be the same, increasing the risk of rollover.

Braking Exercise

Practice braking to get familiar with the brake response:

- Practice braking at low speed first, then increase the speed.
- Practice braking in straight line at different speeds and different braking forces.
- Practice emergency braking. Optimal braking is obtained in straight line, with high force applied, without locking the wheels.

Remember, braking distance depends on vehicle speed, load and the type of surface. Also, the tires and brakes conditions play a major role.

Reverse Exercise

Practice using the reverse:

- Place 1 cone marker on both sides of the vehicle beside each rear wheel.
- Move the vehicle forward until you can see the cone markers behind you, then stop the vehicle. Acknowledge the distance required to see obstacles behind you.
- Learn how the vehicle handles in reverse and reacts with steering inputs.
- Always perform this reverse exercise at slow speeds.
- Become familiar with the use of the speed limit override function (4WD-LOCK only). Do not make abrupt steering inputs while using the override, as it increases the risks of rollover.

Emergency Engine Stopping Exercise

Learn how to stop your engine quickly in an emergency situation:

- While running at low speed, simply turn the ignition key to the off position. This is to familiarize you with the vehicle's reaction when the engine is turned off while driving and to develop this reflex.

SAFE OPERATION - DRIVING SAFELY

Operating Your Vehicle

Off-Road Operation

The very nature of off-road operation is dangerous. Any terrain which has not been specially prepared to carry vehicles presents an inherent danger where terrain substance, shape, and steepness are unpredictable. The terrain itself presents a continual element of danger, which must be knowingly accepted by anyone venturing over it.

An operator who takes a vehicle off-road should always exercise the utmost care in selecting the safest path and keeping close watch on the terrain ahead. This vehicle should never be operated by anyone who is not completely familiar with the driving instructions applicable to the vehicle, nor should it be operated on steep or treacherous terrain.

General Driving Tips

Care, caution, experience and driving skill are the best precautions against the hazards of vehicle operation. Whenever there is the slightest doubt that the vehicle can safely negotiate an obstacle or a particular piece of terrain, always choose an alternate route. In off-road operation, power and traction, not speed, are important. Never drive faster than visibility and your ability to select a safe route permit. Never operate the vehicle if the controls do not function normally. See your dealer.

Operating in Reverse

When operating in reverse, check that the path behind the vehicle is free of people or obstacles. Pay attention to blind spots. When it is safe to proceed in reverse, go slowly and avoid sharp turns.

⚠WARNING
Steering inputs in reverse operation increase the risk of rollover.

⚠WARNING
When driving downhill in reverse, gravity can increase the vehicle speed above the set limited reverse speed. Failure to use caution when operating in reverse can result in serious injury or death.

NOTE:

This vehicle is equipped with a reverse speed limiter function. In reverse operation, the engine RPM is limited, thus limiting the vehicle reverse speed. Do not operate at wide open throttle. Open the throttle just enough to maintain a desired speed.

Crossing Paved Roads

If you have to cross a paved road, ensure to have complete visibility on both sides for incoming traffic and decide on exit point on other side of road. Drive in a straight line toward that point. Do not make sharp direction changes or abrupt accelerations as it may result in a rollover situation. Do not travel on sidewalks or bicycle trails, as they are designated specifically for those uses.

Riding on Paved Surfaces

Avoid paved surfaces. This vehicle is not designed to operate on paved surfaces and is more likely to roll over. If you must drive on pavement, turn gradually, go slowly, and avoid abrupt acceleration and braking.

Shallow Water Crossing

Water can be a unique hazard. If it is too deep the vehicle may “float” and topple. Check the water depth and current before you attempt to cross any water. Water depth should not exceed 60 cm to safely cross the obstacle.

SAFE OPERATION - DRIVING SAFELY

Beware of slippery surfaces such as rocks, grass, logs, etc., both in the water and on its banks. A loss of traction may occur. Do not attempt to enter the water at high speed. Water will affect the braking ability of your vehicle. Make sure you dry the brakes by applying them several times while driving slowly after the vehicle leaves the water.

What to Do If Vehicle is Submerged

If the vehicle becomes immersed, it will be necessary to have it transported to your dealer as soon as possible. Do not attempt to re-start the engine, as water may have been ingested into the cylinders, which can cause internal damage.

Riding in Mud, Ice or Snow

When performing a pre-ride inspection, pay special attention to locations on the vehicle where mud, ice and/or snow accumulations may obstruct visibility of the tail lamps, clog ventilation openings, block the radiator and fan, and interfere with the movement of controls. Before starting with your vehicle, check the steering, throttle and brake pedals for interference-free operation.

Whenever this vehicle is driven on a snow or ice covered path, the tire grip is generally reduced, causing the vehicle to react differently to control inputs from the operator.

Riding on Sand

Sand and riding on sand dunes is a unique experience, but there are some basic precautions that should be observed. Wet, deep, or fine sand may create a loss of traction and cause the vehicle to slide, drop off or become “bogged” down. If this occurs, look for a firmer base. Again, the best advice is to slow down and be watchful of the conditions.

When riding on sand dunes, it is advisable to equip the vehicle with an antenna-type safety flag. This will help make your location more visible to others over the next sand dune. Proceed carefully should you see another safety flag ahead.

Riding on Gravel, Loose Stones, or Other Slippery Surfaces

Riding on gravel or loose stones is very similar to riding on ice. They affect the steering of vehicle, possibly causing it to slide and tip over especially at high speeds. In addition, braking distance may be affected. Remember that “gunning” the throttle or sliding may cause loose stones to be ejected rearwards which could hit other people.

Crossing Obstacles

Obstacles on the trail should be traversed with caution. This includes rocks, fallen trees, and depressions. You should avoid them whenever possible. Remember that some obstacles are too large or dangerous to cross and should be avoided. As a guideline, never attempt to cross an obstacle higher than the ground clearance of the vehicle. Small rocks or small fallen trees may be safely crossed. Approach obstacles at low speed and to as much a right angle as possible. Adjust speed without losing momentum and do not accelerate abruptly. The passenger must grasp handhold firmly and brace feet on the floor.

Hill Driving Conditions

When driving on hills or slopes, two things are highly important: be prepared for slippery surfaces or terrain variations, obstacles, and brace yourself properly inside vehicle. If you climb or descend a hill that is too slippery or has too loose a surface, you can lose control. If you go over the top of a hill at high speed, you may not have time to prepare for the terrain on the other side. Avoid parking on a slope. Always put the shift lever in PARK and activate the hand brake when stopped or parked, especially on an incline, to avoid rolling. If you must park on a steep incline, block the wheels on the downhill side using rocks or other suitable material.

Uphill Driving

Use the low gear (L) for uphill driving. Due to its configuration, this vehicle has very good traction even while climbing, so much so that tip-over is possible before traction is lost. For example, it is common to encounter terrain situations where the top of the hill has eroded to a point that the hill peak rises very sharply. This vehicle is not designed to negotiate such a condition. Take an alternate route.

If you feel that the slope is getting too steep to climb, apply the brakes to immobilize the vehicle. Put the shift lever in reverse (R), and back straight down the hill, barely releasing brakes to remain at low speed. Do not attempt to turn around. Never coast downhill while the vehicle is in neutral. Do not perform hard braking, as it increases the risk of tip-over.

Downhill Driving

This vehicle can climb steeper slopes than it can descend safely. Therefore, it is essential to assure that a safe route exists to descend a slope before you climb it. Decelerating while negotiating a slippery downhill slope could “toboggan” the vehicle, causing it to slide. Maintain steady speed and/or accelerate slightly to regain control. Never slam the brakes and lock the wheels.

Hauling and Towing Loads

Your vehicle can help you perform a number of different light tasks ranging from snow removal, to pulling wood, or carrying cargo. This can change the vehicle handling. To prevent possible injury, follow the instructions and warnings in this manual and on the vehicle.

Always respect the load limits of the vehicle. Overloading the vehicle can over-stress the components and cause failure.

Carrying Loads

The load limit of the vehicle including the weight of operator, passenger, cargo box load (including towing hitch weight), accessories: 1509 lb. (685 kg)

Following is an example of suitable total vehicle load distribution:

EXAMPLE OF SUITABLE VEHICLE TOTAL LOADS			
Operator and Passenger	**Cargo Box Load (Including Towing Hitch Weight)**	**Accessories Storage**	**Total Vehicle Load**
529 lb. (240 kg)	772 lb. (350 kg) (176 lb. (80 kg))	209 lb. (95 kg)	1509 lb. (685 kg)

⚠WARNING
Must use LOW GEAR if total payload is greater than 265 kg (584 lb).

Vehicle Settings When Carrying Loads

If the total load approaches 1509 lb. (685 kg), including weight of operator, passenger, cargo, accessories and trailer Towing Hitch Weight:

- Inflate the tires to maximum pressure: Front: 14 PSI (97 kPa), rear :18 PSI (124 kPa).
- Readjust the suspension coil spring pre-load accordingly.
- Operate with the shift lever in L (low gear) when carrying heavy loads in the cargo box and/or pulling a trailer.

Load Distribution

Your vehicle has been designed to carry or tow a certain amount of load. Always:

- Read and understand the load distribution warnings listed on the warning labels.
- Never exceed the specified weights.
- Cargo weight should be mounted as low as possible.
- When operating over rough or hilly terrain with loads or towing, reduce speed and cargo to maintain stable driving conditions.

Pulling or Towing

Your vehicle is equipped with a hitch receiver and winch for towing or pulling.

Pulling a Load

- Never pull a load by attaching it to the cage. This can cause the vehicle to tip over. Use only the trailer hitch or winch (if installed) to pull a load.
- When pulling loads with a chain or cable, ensure that there is no slack before starting and maintain tension while pulling.

⚠WARNING
Slack can cause a chain or cable to break and snap back, possibly causing injury.

- When pulling a load, respect the maximum hauling capacity.
- If pulling another vehicle, be sure that someone is controlling the pulled vehicle. They must brake and steer to prevent the vehicle from going out of control.
- Reduce your speed when pulling a load and turn gradually to avoid chains, straps, ropes or cables from catching on the rear wheels. Avoid hills and rough terrain. Never attempt steep hills. Allow more distance for braking, especially on inclined surfaces. Be careful not to skid or slide.
- Before pulling loads with a winch, refer to the winch operation section of this manual.

Towing a Load

If a trailer is used behind the vehicle, make sure that its hitch is compatible with the one on the vehicle. Make sure the trailer is horizontal with the vehicle. Use safety chains or cables that keep the trailer secured to the vehicle in the event of a hitch failure.

Improperly loading a trailer may cause loss of control. Respect the recommended maximum hauling capacity and maximum tongue load. Make sure there is at least some weight on the tongue. Follow these guidelines for hauling and towing of cargo:

⚠WARNING
Overloading the vehicle, carrying or towing cargo improperly, can alter the vehicle handling and may cause loss of control or braking instability.

SAFE OPERATION - DRIVING SAFELY

- Always use low gear while towing to avoid clutch wear and belt issues.
- Reduce speed when hauling or towing loads.
- Never exceed the stated load capacity for this vehicle.
- All loads must be secured before operation. Unsecured loads may shift and create unstable operating conditions, which could result in loss of control of the vehicle.
- When operating over rough or hilly terrain, reduce speed and cargo to maintain stable driving conditions.
- Use extreme caution when applying brakes with a loaded vehicle. Avoid terrain or situations that may require backing downhill.
- Load weight distribution should be as low as possible. Carrying a high load raises the center of gravity and creates an unstable operating condition. Reduce load weight when the cargo center of gravity is high.
- ▪When handling off-centered loads that cannot be centered, secure the load and operate with extra caution.
- When operating with loads extending beyond the cargo area, stability and maneuverability may be adversely affected, causing the machine to overturn.
- Towing a load while carrying cargo may cause an imbalanced condition that increases the possibility of vehicle overturn. Balance loads proportionally, but do not exceed the stated load capacity.
- Always attach to the tow using the hitch point and hardware specifically made for towing. Never exceed the recommended Towing Hitch Weight.
- Using chains, straps, rope or other materials to tow objects is not recommended, as these items could get caught in the rear wheels, resulting in vehicle damage or personal injury.

- While towing, the vehicle should never exceed 10 mph (16 km/h) towing a load on a level surface. Vehicle speed should never exceed 5 mph (8 km/h) when towing loads in rough terrain, while cornering, or while ascending or descending a hill.
- When stopped or parked, block the vehicle and trailer wheels from possible movement.
- Use caution when disconnecting a loaded trailer; it or its load may topple on you or others.

MAXIMUM HAULING CAPACITY			
Type of Attachment	**Trailer Load Allowed**	**Trailer Hitch Weight Allowed**	**Note**
2 in. (51 mm X 51 mm) hitch ball support	1763 lb. (800 kg)	176 lb. (80 kg)	Includes trailer and trailer load.

Winch Operation

(Select Markets) Your vehicle may be equipped with a winch that can pull certain capacities and types of loads. It is useful for vehicle self-recovery when stuck, assisting another vehicle in recovery, moving fallen trees, removing brush, etc.

Consider practicing the operation and use of your winch before you actually need to use it.

The safety warnings, operating precautions and instructions in this section apply if your vehicle came equipped with a winch, or if you choose to install an accessory winch on your vehicle:

Winch Safety Warnings

These safety warnings apply if your vehicle is equipped with a winch, or if you choose to install an accessory winch on your vehicle:

- Read and understand all sections of this manual.
- Improper winch use or failure to correctly follow the winch guidelines, instructions, and warnings in this manual can result in SEVERE INJURY or DEATH.
- Improper or lack of winch maintenance and service could lead to SEVERE INJURY or DEATH.
- Always keep body, hair, clothing, and jewelry clear of the winch cable, fairlead, and hook during winch operation.
- Always keep the area around the vehicle, winch, winch cable and load clear of people, pets, and distractions during winch operation.
- Always wear eye protection and heavy gloves during winch operation.
- Never use alcohol or drugs before or while operating the winch.
- Never allow children under 16 years of age to operate the winch.
- Never attempt to “jerk” a load attached to the winch by moving the vehicle.

- Never winch up or down, or to the sides at sharp angles. This can destabilize the winching vehicle and possibly cause it to move without warning.
- Never attempt to winch loads that weigh more than the winch capacity rating.
- Never touch, push, pull, or straddle the cable while winching a load.
- Never let the winch cable run through your hands, even if wearing heavy gloves.
- Never release the drum on the winch when the winch cable is under load.
- Never use the winch for lifting or transporting people.
- Never use the winch to hoist or suspend a vertical load.
- Never retract the hook fully into the winch. This can cause damage to system components.
- Never operate the winch or the vehicle if they are in need of repair or service.
- Always turn the ignition swtich OFF and unplug the remote control (if equipped) to prevent inadvertent activation or unauthorized use when the vehicle or winch are not being used.

Winch Operating Precautions

These operating precautions should always be followed if your vehicle is equipped with a winch, or if you choose to install an accessory winch on your vehicle:

- Always inspect your winch and winch cable before each use.
- Always use the provided hook strap when pulling cable out or guiding cable in. Never grab the hook.
- Always align the load directly in front of the vehicle and winch as much as possible. Avoid winching with the cable at a sharp angle to the winching vehicle’s centerline whenever possible.

- If winching at an angle is unavoidable, follow these precautions while operating:
  A. Look at the winch drum occasionally. Never let the winch cable “stack” or accumulate at one end of the drum. Too much cable at one end of the drum can damage the winch and cable.
  B. If cable stacking occurs, stop winching. Follow the ‘Winch Cable Spooling Guidelines’ section in this manual to redistribute the cable evenly before continuing.
- Always apply the vehicle’s park brake and/or park mechanism to hold the vehicle in place during winching. Use wheel chocks when necessary.
- Always maintain at least five full turns of cable wrapped around the winch drum at all times. The friction provided by the wrapped cable allows the drum to pull on the winch cable and move the load.
- Never grease or oil the winch cable. This will cause the winch cable to collect debris that will shorten the life of the cable.
- The winch motor and relay connector may become hot during continuous use. When winching for more than 45 seconds, or if the winch stalls during operation, stop and allow the winch components to cool for a minimum of 10 minutes before using it again.
- Never operate the winch without running the engine. The engine’s charging system helps keep the battery maintained. Battery reserve capacity can be quickly exhausted by heavy winch use, rendering the starting system inoperable.
- Always operate with concern for the environment. Do not purposely damage trees, etc.

Basic Winch Operation

Follow these operating instructions if your vehicle is equipped with a winch, or if you choose to install an accessory winch on your vehicle. Read *Winch* ***Safety Warnings and Winch Operating Precautions*** on the preceding pages before using your winch.

SAFE OPERATION - DRIVING SAFELY

BEFORE YOU BEGIN - Realize that each winching situation is unique:

- Take your time to think through the winch operation you are about to perform.
- Proceed slowly and deliberately.
- Never hurry or rush during winching.
- Always pay attention to your surroundings.
- Be prepared to change your winching strategy if it is not working.
- Remember that although your winch is very powerful, there are simply some situations that you and the winch will not be able to deal with. Do not be afraid to ask others for help when necessary.

1. Always inspect the vehicle, winch, cable and controls for signs of damage or parts in need of repair before each use. Pay particular attention to the first 3 feet (1 meter) of winch cable if the winch is used (or has been used) for lifting a plow. Promptly replace any worn or damaged cable.
2. Apply the vehicle's park brake and/or park mechanism to hold the vehicle in place during winching. Use wheel chocks when necessary.
3. Release the winch drum and pull out the required length of cable. Always use the hook strap to handle the hook. Never remove the hook strap from the hook.

CAUTION: Always maintain a minimum of five (5) full turns of cable around the winch drum at all times. The friction provided by wrapping cable allows the drum to pull on the cable and move the load.

4. Attach the hook onto the load, or use a tow strap or chain to secure the load to the winch hook. Never hook the winch cable back onto itself. This can damage the winch cable and result in cable failure.

SAFE OPERATION - DRIVING SAFELY

WARNING: Never use a 'recovery strap' for winching. Recovery straps are designed to stretch and could release excessive energy that can result in SEVERE INJURY or DEATH if the strap or winch cable breaks. Use only undamaged tow straps or chains that do not stretch.

5. Re-engage the winch drum.
6. Slowly winch in slack of the winch cable until it is gone, then stop and follow the instructions for 'winch damping' to ensure safe operation:
   - A. Place a damper on the mid-point of winch cable length to absorb energy that could be released by a winch cable failure. A damper can be a heavy jacket, tarp, or other soft, dense object. A damper can absorb much of the energy released if the cable breaks during winching. Even a tree limb can help as a damper if no other items are available to you.
   - B. Lay the damper on top of the mid-point of the winch cable length.
   - C. On a long pull, it may be necessary to stop winching so the damper can be repositioned to a new mid-point. Always release the tension on the winch cable before repositioning the damper.
   - D. Avoid being directly in line with the winch cable whenever possible. Also, never permit others to stand near or in line with the winch cable during winch operation.
7. Stop winching as soon as the job is completed or the load can be moved without the help of the winch.
8. Detach the winch hook, then rewind the cable evenly back onto the drum following the instructions in this manual.

Vehicle Recovery Methods

Vehicle Self-Recovery:

- A. Release the winch drum and pull out the required length of cable.
- B. Whenever possible, pick an anchor point that aligns the winch cable to the vehicle's centerline as close as possible. This will help the spooling of the winch cable and reduce the load on the fairlead.
- C. Attach the winch hook to an anchor point. NOTE: If freeing a stuck vehicle by attaching to a tree, use an item such as a tow strap to avoid damaging the tree during winch operation. Sharp cables and chains can damage and even kill trees. Always respect the environment.
- D. Re-engage the winch drum.
- E. Slowly winch in any slack in the winch cable, then damper it.
- F. Shift to the lowest gear available that will propel the vehicle in the direction of winching.
- G. Carefully apply winch power and throttle together to free the vehicle.

CAUTION: Using the vehicle throttle and winching at the same time has risk and is optional. Place the vehicle in neutral and use only the winch if unsure of your operating abilities.

- H. Stop winching as soon as the stuck vehicle is able to propel itself without the help of the winch.
- I. Detach the winch hook, then rewind the cable evenly back onto the drum following the instructions in this manual.

CAUTION: The ONLY time a winch-equipped vehicle should be moving and using the winch is for self-recovery. The winch-equipped vehicle should NEVER use motion to "shock-load" the winch cable in an attempt to recover a second stuck vehicle. See 'Winch Shock Loading' section in this manual for more information.

Recovery of Another Vehicle:

- A. Release the winch drum and pull out the necessary length of cable.
- B. Attach the winch hook to the vehicle. Whenever possible, pick an anchor point on the stuck vehicle that aligns the winch cable to the winching vehicle's centerline as close as possible. This will help the spooling of the winch cable and reduce the load on the fairlead.

CAUTION: Never attach the winch hook to a suspension component, brush guard, bumper or cargo rack. Vehicle damage may result. Always attach the hook to the strongest available portion of the vehicle frame or hitch.

- C. Re-engage the winch drum.
- D. Slowly winch in any slack in the winch cable, then damper it.
- E. Shift to the lowest gear available on the stuck vehicle that will propel it in the direction of winching.
- F. Carefully apply winch power and the stuck vehicle's throttle together to free it.
- G. Stop winching as soon as the stuck vehicle is able to propel itself without the help of the winch.
- H. Detach the winch hook, then rewind the cable evenly back onto the drum following the instructions in this manual.

Winch Cable Care

Always inspect your winch cable before each use for worn or kinked winch cable. Never use a cable that is damaged. Follow these guidelines for inspection and use:

- A winch cable made of wire rope that is kinked, deformed, or bent is permanently and severely damaged. Promptly discontinue use of a winch cable in this condition.

- A kinked winch cable made of wire rope that has been “straightened out”, even though it may look usable, has been permanently and severely damaged. It can no longer achieve its load capacity rating. Promptly discontinue use of a winch cable in this condition.
- A winch cable made of synthetic rope should be inspected for signs of fraying. Replace the cable if fraying is observed. Promptly discontinue use of a winch cable in this condition.
- Replace synthetic winch cable if fused or melted fibers are discovered. The synthetic rope will be stiff and appear smooth or glazed in the damaged section. Promptly discontinue use of a winch cable in this condition.
- Never replace a synthetic winch cable with consumer-grade polymer rope. Only use cable that is specifically designed for winch use.
- Never grease or oil a wire rope winch cable. This will cause the cable to collect debris that will shorten the life of the cable.
- Never operate the winch with a damaged hook or latch. Always replace damaged parts before using the winch.

WARNING: Replace the winch cable and components at the first sign of damage to prevent SEVERE INJURY or DEATH in the event of failure.

Winch Cable Spooling Guidelines

After winching is complete, especially if winching at an angle, it may be necessary to respool the winch cable evenly across the drum. This reduces the chances of the winch cable “wedging” itself between lower layers of cable. You will need an assistant to perform this task:

- A. Release the winch drum.

- B. Pull out the winch cable that is wrapped unevenly onto the drum.
- C. Re-engage the winch drum.
- D. Have an assistant pull the winch cable hook strap tightly to apply about 100 lbs. (45 kg) of tension.
- E. Slowly winch the cable in while the assistant moves the end of the cable back and forth horizontally to evenly distribute it onto the drum.

Winch 'Shock Loading'

Your winch (if equipped) is designed and tested to withstand the loads produced when operated from a stationary vehicle. Always remember that the winch, cable and components are NOT designed for shock loading. Follow these guidelines:

- Never attempt to "jerk" a load with the winch. For example, never take up cable slack by moving the winching vehicle in an attempt to move an object. This is a dangerous practice that generates high loads which may exceed the strength of the components. Even a slow moving vehicle can create a large shock load which can cause damage.
- Never quickly turn the winch ON and OFF repeatedly (''jogging"). This is a form of shock loading. This puts extra load on the winch components, the cable, and generates excessive heat in the motor and relay assembly.
- Never tow a vehicle or other object with your winch. Towing with a winch produces shock loading even when towing at slow speeds. Towing from the winch also positions the towing force high on the vehicle, which can cause vehicle instability and the possibility of an accident.

- Never use recovery straps with your winch. This is a form of shock loading. Recovery straps are designed to stretch and can store energy. Stored energy in the recovery strap is released if a failure occurs, making the event even more hazardous. Similarly, never use elastic “bungie” cords for winching.
- Never use the winch to tie down the vehicle to a trailer or other transporting unit. This is a form of shock loading that can cause damage to the winch components, the cable, or the transporting unit.

Maintenance

Following the maintenance schedule in your owner's manual will help keep your vehicle in the safest, most reliable condition. Inspection, adjustment, and lubrication of important components are explained in the maintenance schedules

Inspect, clean, lubricate, adjust, and replace parts as necessary. When inspection reveals the need for replacement parts, always use genuine parts available from your dealer.

NOTE:

Periodic service and adjustments are critical. If you are not familiar with performing safe service and adjustment procedures, have a qualified dealer perform the required maintenance for you.

NOTE:

Pay special attention to the engine oil level during cold weather operation. A rise in engine oil level can indicate contaminants collecting in the oil sump or crankcase. Change oil immediately if the oil level begins to rise. Monitor the oil level, and if it continues to rise, discontinue use and determine the cause, or see your dealer.

⚠WARNING

Procedures marked as '■' means If repair is required, have an authorized dealer perform repairs that involve this component or system. Improperly performing the procedure could result in component failure and lead to serious injury or death.

MAINTENANCE

Severe Use Definition

BMSMOTOR defines severe vehicle use as:

- Frequent immersion in mud, water or sand
- Racing or race-style high RPM use
- Prolonged low speed, heavy load operation
- Extended engine idle
- Short trip cold weather operation
- Vehicles used in commercial operations

For vehicles that are subjected to severe use, reduce all maintenance and service intervals by 50%.

MAINTENANCE

Periodic Maintenance Schedule and Icon Key

Maintenance intervals in the following schedules are based upon average riding conditions and an average operating speed of approximately 12.4 mph (20 km/h). Vehicles subjected to severe or commercial use must be inspected and serviced more frequently.

The following icon keys are used to note special circumstances:

► = Severe Use Item. Reduce interval by 50% on vehicles subjected to severe use.

■ = Have an authorized dealer perform repairs that involve this component or system.

● = Emissions related components. Have an authorized dealer perform repairs that involve this component or system.

⚠WARNING
Procedures marked as '■' means if repair is required, have an authorized dealer perform repairs that involve this component or system. Improperly performing the procedure could result in component failure and lead to serious injury or death.

MAINTENANCE

General Recommended Lubrication

Check all components at the intervals outlined in the Periodic Maintenance Schedule. Items not listed in the schedule should be lubricated at the general lubrication interval.

- Change lubricants more often under severe use, such as wet or dusty conditions.
- Use All Season Grease on pivot points.
- Lubricate every 500 miles (800 km), before long periods of storage, after pressure washing, or after submerging drive system.

Item	Lubricant	Method
Engine oil	SAE 10W-40 / SAE 5W-40 / SAE 15W-40 (See page 78 for oil viscosity chart)	Screw off, clean, insert and pull out dipstick to check oil level
Transmission oil	SAE75W-90 GL-5	Screw off, clean, insert and pull out dipstick to check oil level
Brake fluid	DOT4	Keep level between upper and lower lines
Front gear case oil	SAE 80W-90 GL-5	Oil capacity: 11.2 oz. (330mL)
Rear gear case oil	SAE 80W-90 GL-5	Oil capacity: 13.5 oz. (400mL)
Suspension pivots and drive train	All Season Grease	Grease gun - Pump grease until it begins to flow from the pivot point

MAINTENANCE

Pre-Ride Maintenance Checklist

Perform these inspections before operating the vehicle:

Item		Maintenance before operation			
		Hour	Calendar	Miles (km)	Remarks
■	Steering system	-	Pre-Ride	-	Visually inspect, test, or check components. Make adjustments and/ or schedule repairs when required.
■	Throttle return	-	Pre-Ride	-	
	Front suspension and axles	-	Pre-Ride	-	
	Rear suspension and axles	-	Pre-Ride	-	
	Tires	-	Pre-Ride	-	
	Brake fluid level	-	Pre-Ride	-	
	Brake lever / foot brake function	-	Pre-Ride	-	
	Brake system function	-	Pre-Ride	-	
	Wheels / fasteners	-	Pre-Ride	-	
	Engine oil level	-	Pre-Ride	-	
►	Air filter / Air box and connections	-	Pre-Ride	-	Visually inspect. Replace filter when dirty.

► = Severe Use Item. Inspect frequently on vehicles subjected to severe use.

■ = Have an authorized dealer perform repairs that involve this component or system.

● = Emissions related components. Have an authorized dealer perform repairs that involve this component or system.

MAINTENANCE

Item		Maintenance before operation			
		Hour	Calendar	Miles (km)	Remarks
►	Air box sediment tube	-	Pre-Ride	-	Inspect. If deposits are visible, clean intake tubes, air box, and replace air filter.
►	CVT sediment tube	-	Pre-Ride	-	Inspect. If deposits are visible, drain / clean the CVT or have it serviced by a dealer.
■	Headlight aim / General lighting and turn indicators (if equipped)	-	Pre-Ride	-	Inspect. Adjust or replace lights when necessary.
►	Radiator	-	Pre-Ride	-	Inspect for mud or debris blocking airflow. Clean surfaces when necessary.

► = Severe Use Item. Inspect frequently on vehicles subjected to severe use

■ = Have an authorized dealer perform repairs that involve this component or system.

● = Emissions related components. Have an authorized dealer perform repairs that involve this component or system.

MAINTENANCE

Break-In Maintenance Checklist

Perform these maintenance items when the vehicle break-in is completed:

Item		Break-in Maintenance (Perform at the interval that arrives first)			
		Hour	Calendar	Miles (km)	Remarks
	General lubrication	20	-	200 (320)	Lubricate all grease points, pivots, cables, etc.
	Engine oil / oil filter / oil strainer	20	-	200 (320)	Change oil and filter. Clean oil strainer.
►	Engine air filter	20	-	200 (320)	Inspect; replace if dirty; do not clean
■	Engine valve clearance	20	-	200 (320)	Check and adjust as necessary.
	Front / Rear gear case oil	20	-	200 (320)	Check level. Inspect for leaks.
	Coolant	20	-	200 (320)	Check level. Inspect for leaks.
	Transmission oil	20	-	200 (320)	Inspect level.
	Engine hoses, gaskets and seals	20	-	200 (320)	Inspect for leaks.

► = Severe Use Item. Reduce interval by 50% on vehicles subjected to severe use.
■ = Have an authorized dealer perform repairs that involve this component or system.
● = Emissions related components. Have an authorized dealer perform repairs that involve this component or system.

MAINTENANCE

Item		Break-in Maintenance (Perform at the interval that arrives first)			
		Hour	Calendar	Miles (km)	Remarks
►	Brake pads	20	-	200 (320)	Inspect pad thickness.
	Battery	20	-	200 (320)	Check terminals, clean, test battery condition if required.
■	Idle condition	20	-	200 (320)	Inspect for proper rpm. See dealer for service if out of spec or erratic.
■	Steering / Wheel Alignment	20	-	200 (320)	Inspect steering system. See dealer for service if wheel alignment is required.
►	Foot brake / Hand brake	20	-	200 (320)	Inspect function. Adjust as necessary.
	Gear cases, CV shafts, Propshafts	20	-	200 (320)	Inspect for leaks.

► = Severe Use Item. Reduce interval by 50% on vehicles subjected to severe use.

■ = Have an authorized dealer perform repairs that involve this component or system.

● = Emissions related components. Have an authorized dealer perform repairs that involve this component or system.

MAINTENANCE

Periodic Maintenance Schedule

Perform maintenance at the interval that arrives first after the break-in period:

Item		Periodic Maintenance Intervals (Perform at the interval that arrives first)			
		Hour	Calendar	Miles (km)	Remarks
►	Brake pads	10	Monthly	100 (160)	Inspect pad thickness.
	Battery	20	--	200 (320)	Check terminals. Clean and test battery condition as necessary.
	Engine hoses, gaskets and seals	20	--	200 (320)	Inspect for leaks.
►	Air filter	50h	--	500 (800)	Always inspect pre-ride. Inspect frequently if subjected to severe use. Replace if dirty. Do not clean.
►	CVT air intake filter screen / filter	50h	-	500 (800)	Clean filter screen or filter, replace with new one if necessary.
►	General lubrication	50h	3M	500 (800)	Lubricate all fittings, pivots, cables, etc.

► = Severe Use Item. Reduce interval by 50% on vehicles subjected to severe use.

■ = Have an authorized dealer perform repairs that involve this component or system.

● = Emissions related components. Have an authorized dealer perform repairs that involve this component or system.

MAINTENANCE

Item		Periodic Maintenance Intervals (Perform at the interval that arrives first)			
		Hour	Calendar	Miles (km)	Remarks
►	Front gear case oil	100h	12M	1000 (1600)	Inspect level. Change yearly if hours or distance interval is not met.
►	Rear gear case oil	100h	12M	1000 (1600)	Inspect level. Change yearly if hours or distance interval is not met..
►	Engine oil / oil filter / oil strainer	100h	12M	1000 (1600)	Inspect for color change. Change if dirty and clean strainer. Change yearly if hours or distance interval is not met.
	Cooling system	50h	6M	500 (800)	Test coolant strength. Pressure test system yearly.

► = Severe Use Item. Reduce interval by 50% on vehicles subjected to severe use.

■ = Have an authorized dealer perform repairs that involve this component or system.

● = Emissions related components. Have an authorized dealer perform repairs that involve this component or system.

MAINTENANCE

Item		Periodic Maintenance Intervals (Perform at the interval that arrives first)			
		Hour	Calendar	Miles (km)	Remarks
►	Radiator	50h	6M	500 (800)	Inspect; clean external surfaces. Clean more frequently if subjected to severe use.
■	Steering system	50h	6M	500 (800)	Inspect. Lubricate.
►	Front suspension	50h	6M	500 (800)	Lubricate. Check fasteners.
►	Rear suspension	50h	6M	500 (800)	Lubricate. Check fasteners.
►	Gear shift	50h	1M	500 (800)	Inspect, lubricate, adjust as necessary.
► ■	Throttle body / throttle cable	50h	6M	500 (800)	Inspect. Clean carbon deposits. Inspect cable and lubricate frequently if subjected to severe use.

► = Severe Use Item. Reduce interval by 50% on vehicles subjected to severe use.

■ = Have an authorized dealer perform repairs that involve this component or system.

● = Emissions related components. Have an authorized dealer perform repairs that involve this component or system.

MAINTENANCE

Item		Periodic Maintenance Intervals (Perform at the interval that arrives first)			
		Hour	Calendar	Miles (km)	Remarks
► ■	CVT drive belt	100h	12M	1000 (1600)	Inspect. Replace as necessary. See dealer for service.
■	CVT drive and driven pulleys	100h	12M	1000 (1600)	Clean and Inspect pulleys. Replace worn parts. See dealer for service.
	Fuel filter and hoses	100h	24M	2000 (3200)	Inspect routing and condition. Replace filter and high-pressure hoses every 4 years.
	Cooling hoses	100h	--	1000 (1600)	Inspect routing and condition.
►	Valve clearance	100h	--	2000 (3200)	Inspect and adjust as necessary. See dealer for service.

► = Severe Use Item. Reduce interval by 50% on vehicles subjected to severe use.

■ = Have an authorized dealer perform repairs that involve this component or system.

● = Emissions related components. Have an authorized dealer perform repairs that involve this component or system.

MAINTENANCE

Item		Periodic Maintenance Intervals (Perform at the interval that arrives first)			
		Hour	Calendar	Miles (km)	Remarks
●	Fuel system	100h	12M	500 (800)	Inspect fuel tank, cap, fuel pump and fuel pump relay.
	Spark plug	100h	24M	2000 (3200)	Inspect; Replace if worn or fouled.
■	Engine mounts	100h	12M	1500 (2400)	Inspect condition.
	Exhaust pipe and spark arrestor	100h	12M	500 (800)	Inspect. Clean spark arrestor.
►	Wiring, fuses, connectors, relays, and cables	100h	12M	1000 (1600)	Inspect wire routing for wear, security. Apply dielectric grease as necessary to connectors subjected to water, mud, etc.

► = Severe Use Item. Reduce interval by 50% on vehicles subjected to severe use.

■ = Have an authorized dealer perform repairs that involve this component or system.

● = Emissions related components. Have an authorized dealer perform repairs that involve this component or system.

MAINTENANCE

Item		Periodic Maintenance Intervals (Perform at the interval that arrives first)			
		Hour	Calendar	Miles (km)	Remarks
► ■	Wheel bearings	100h	12M	1500 (2400)	Inspect for noise or looseness. Replace as necessary.
►	Safety Belts	100h	12M	2000 (3200)	Visually inspect belts and test latches. Clean latch mechanism more often if used in severe conditions.Replace as necessary.
►	Transmission oil (1000 Engine)	200h	12M	2000 (3200)	Inspect level. Change yearly if hours or distance interval is not met.
	Coolant	200h	24M	4000 (6400)	Change coolant every 2 years if hours or distance interval is not met.

► = Severe Use Item. Reduce interval by 50% on vehicles subjected to severe use.

■ = Have an authorized dealer perform repairs that involve this component or system.

● = Emissions related components. Have an authorized dealer perform repairs that involve this component or system.

MAINTENANCE

Item		Periodic Maintenance Intervals (Perform at the interval that arrives first)			
		Hour	Calendar	Miles (km)	Remarks
►	Brake fluid	200h	24M	1000 (1600)	Inspect fluid for color change. Change fluid every two years.
	Idle condition	--	12M	--	Inspect for proper rpm. See dealer for service if out of spec or erratic.
■	Steering / Wheel Alignment	--	12M	--	Inspect steering system. See dealer for service whenever steering parts or wheel alignment are required.
►	Foot brake height	--	12M	--	Inspect. Replace brake pads or adjust height as required.

► = Severe Use Item. Reduce interval by 50% on vehicles subjected to severe use.

■ = Have an authorized dealer perform repairs that involve this component or system.

● = Emissions related components. Have an authorized dealer perform repairs that involve this component or system.

Maintenance Procedures

Air Filter

Check and change the air filter at the intervals outlined in the Maintenance Schedule. The air filter element should be cleaned or replaced more often if the vehicle is used in extremely dusty or wet areas. Each time air filter maintenance is performed, check the air inlet of the air filter box for obstructions and debris. Check the air filter housing rubber joint to the throttle body and manifold fittings for an airtight seal. Check that all fittings are secure to avoid the possibility of unfiltered air entering the engine.

Air Filter Housing Inspection

There is a check hose at the bottom of the air filter housing. If dust or water can be viewed in this hose, empty the hose and clean the air filter housing thoroughly. If the vehicle was submerged, please contact your local dealer to check for water inside the engine crankcase.

NOTE:

If a large amount of water is present in the air filter, have your dealer check for water entering the engine crankcase.

MAINTENANCE

Air Filter Maintenance

1. Lift up the rear cargo box
2. Loosen the clasp and remove the air filter cover.
3. Remove paper filter element.
4. Inspect the paper air filter and verify it is okay to reinstall. Softly brush off accumulated dust if necessary. Install a new filter as necessary.

NOTE:

Do not wash paper air filters, or use compressed air to clean the paper filter media.

5. Apply a thin film of lubricant on the inside diameter of the air filter rubber seal.
6. Reinstall the air filter housing cover. Verify the cover is installed correctly and is sealing properly.

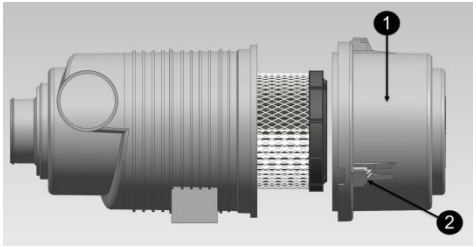

1	Filter Housing Cover		
2	Clasp	3	Check Hose

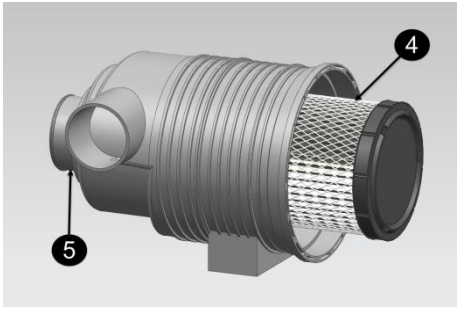

Drying the Air Filter Housing after Submersion

If water has been ingested into the air filter housing, Drain the air filter housing, remove the air filter, and thoroughly dry the components. Do not use compressed air on the paper air filter. Contact your dealer if vehicle performance issues exist.

CAUTION
Do not operate the engine without an air filter element. Unfiltered air entering into the engine can cause engine wear and damage. Driving without an air filter will also decrease performance and can lead to engine overheating.

CAUTION
Major engine damage can result in the vehicle if water has been ingested into the air filter housing, and engine. Have the vehicle serviced by your dealer promptly if your vehicle becomes immersed or stalls in water that exceeds the footrest level. It is important to contact your dealer for service before starting the engine, as water may have been ingested in the air box and engine.

Engine Oil

Always check and change the engine oil at the intervals outlined in the Maintenance Schedule. Change oil more frequently under severe use conditions.

To Check the Engine Oil Level

With vehicle on a level surface, check the oil level as follows:

1. Place the vehicle on the plain ground.
2. Start the engine and allow it to idle for (20~30) seconds. Stop the engine.
3. Wait for a few minutes to allow the engine oil to settle down in crankcase.
4. Lift the rear cargo box to access the engine oil dipstick position.
5. Unscrew the oil dipstick and then wipe it off with a clean rag.
6. Insert the dipstick completely into the oil filler hole, and then remove it again to check the oil level.

NOTE
Engine oil level should be between the upper and lower marks.

7. If the engine level is below the lower mark, add oil to proper level.
8. Insert the oil dipstick and fully tighten it.
9. Install the service hole plate behind the passenger seat.

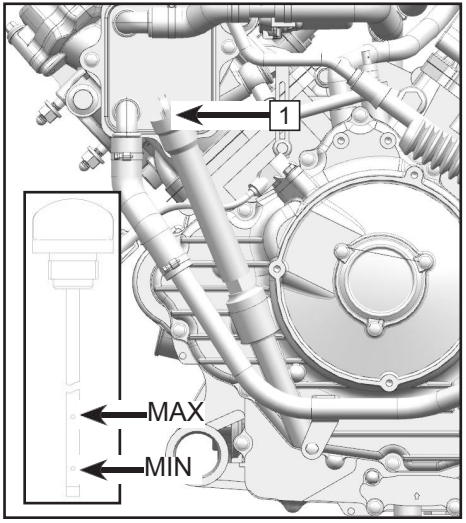

1	Oil dipstick, Engine

To Change the Engine Oil

1. Start the engine and allow it to warm up for (2~3) minutes, then stop the engine.
2. Place an oil pan under the engine to collect the used oil, and then remove the dipstick.
3. Remove the engine oil drain bolt (1) to drain the oil from the crankcase.

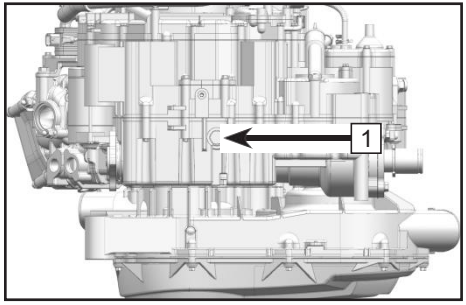

1	Drain bolt, Engine oil

To Change the Oil Filter

1. Remove 3 engine oil bolts (1), open the filter cover (2) to take out the filter.
2. Replace with the new oil filter(3).

NOTE
Make sure the O-ring (4) is well and installed in the box.

3. Install the new oil filter (3) and fix the 3 bolts (1) in the oil filter cover (2). Tighten it to specified torque.

NOTE
Engine oil bolt (1) tightening torque: **7.3 ft-lb. (**10 N·m)

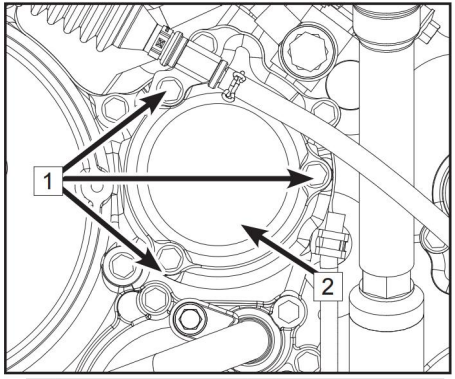

1	Engine oil bolt	2	Filter cover

1. Use a new drain bolt washer and tighten it to specified torque.

NOTE
Drain bolt tightening torque: 22 ft-lb. (30 N·m)

2. Add recommended oil to specified level and then screw in the oil dipstick.

NOTE
Oil capacity with oil filter replacement: 84.5 oz. (2.5 L)

3. Start the engine and allow it to warm up for a few minutes. Check for oil leakage when the engine is warm. Stop the engine immediately if oil leaks are present.
4. Stop the engine and check the engine level. Revise if necessary.

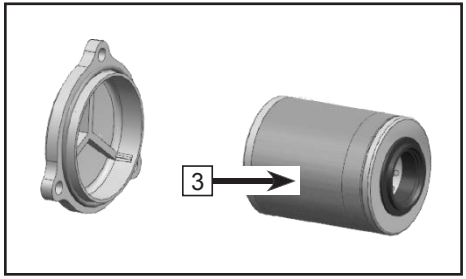

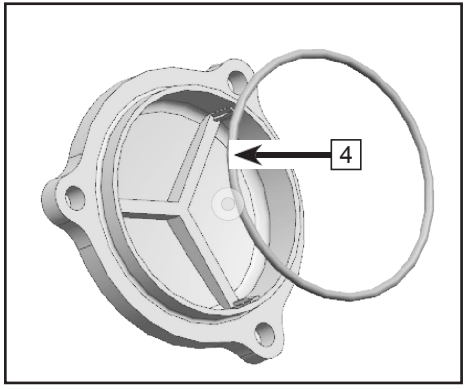

3	Oil filter	4	O-ring

MAINTENANCE

Transmission Oil

Oil Level Check

1. Place the vehicle on a level surface.
2. If the engine was running, wait a sufficient amount of time for the oil to settle and cool.
3. Remove the passenger seat and storage box (1), remove the plastic grommet pin (2), then remove the access panel (3) towards the driver direction.
4. Remove the bolt and washer (4), move heat insulation plate to find the transmission oil dipstick (5).
5. Unscrew the transmission oil dipstick (5), remove it, and wipe off with a clean cloth.
6. Insert the dipstick into the oil filler hole. Do not fully reinstall it.
7. Remove the dipstick and check the oil level indication. Maintain the oil level between the upper and lower indicators.
8. Reinstall the dipstick into the oil filler hole, and hand-tighten it.
9. Reinstall the access panel and return the passenger seat to its original locked position.

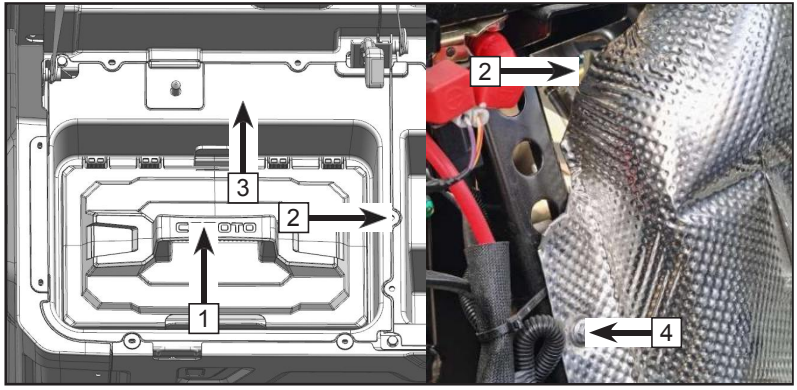

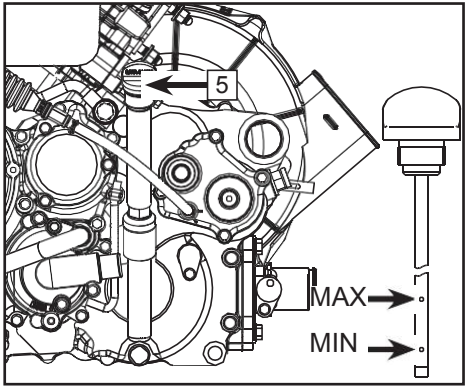

MAINTENANCE

Oil Change

1. Place the vehicle on a level surface.
2. If the engine was running, wait a sufficient amount of time for the oil to settle and cool.
3. Place an oil pan under the engine to collect the used oil.
4. Remove oil dipstick.
5. Remove the transmission oil drain bolt at the bottom of the oil fill location and drain the oil.
6. Place a new sealing washer on the drain bolt, then assemble and tighten the drain bolt to **22 ft-lb. (30 N•m)**.
7. Add the specified amount of recommended transmission oil at the transmission oil dipstick location, and then reinstall the transmission oil dipstick and hand-tighten it.

NOTE: Transmission oil type – SAE75W/90GL-5 Capacity - 20 oz. (0.6L)

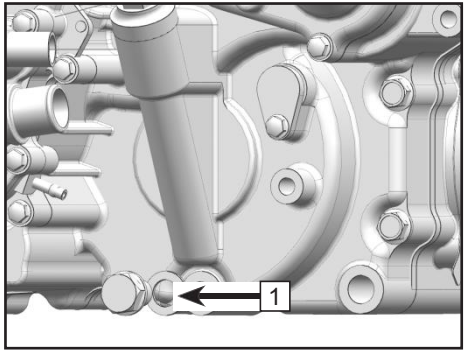

1	Drain bolt, Transmission

MAINTENANCE

Engine Valve Clearance Adjustment

The intake and exhaust valve clearances change with use of the vehicle, which can result in improper fuel/air supply or engine noise. To prevent this, the valve clearances must be adjusted according to the maintenance schedule. This adjustment should be performed by a professional service technician. Contact your dealer for service.

NOTE:

Intake valve clearance (cold engine): .**0.0024 in. ~ 0.0055 in. (0.06mm ~0.14mm)**

Exhaust valve clearance (cold engine): .**0.0043 in. ~ 0.0075 in. (0.11mm ~0.19mm)**

Engine Idle Speed

This vehicle is equipped with an electronic fuel injection system. The throttle body is a vital part of the fuel system which requires very sophisticated adjustment, and was set at the factory. There are no consumer provisions to adjust engine idle speed. If the settings are disturbed, poor engine performance and damage may result. Check the engine idle speed for stability or an abnormal engine idle condition and contact your dealer for service if necessary.

MAINTENANCE

Front and Rear Gear Case

The front and rear gear case must be checked for oil leaks before operating. If any leaks are found, have your dealer check and repair the vehicle.

Front Gear Case Oil Check

1. Place the vehicle on a level surface.
2. Remove the oil filler bolt (1) and check the oil level. The level should be up to the brim of the hole. If the level is low, add sufficient oil to raise it to the specified level.
3. Install the oil filler bolt and tighten it to 18.4 ft-lb. (25 Nm).

Front Gear Case Oil Change

1. Place the vehicle on a level surface.
2. Place an oil pan under the gear case to collect the used oil.
3. Remove the oil drain bolt (2) at the bottom of the gear case and drain the oil.
4. Install the oil drain bolt and tighten it to 18.4 ft-lb. (25 Nm).
5. Remove the oil filler bolt. Add sufficient oil to raise the level up to the brim of the fill hole (1).
6. Install the oil filler bolt and tighten it to 18.4 ft-lb. (25 Nm).

NOTE:

Approximate front gear case oil capacity: **11 oz. (330 mL)**

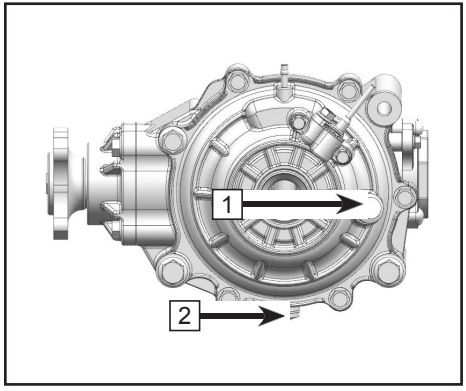

1	Fill bolt	2	Drain plug

Rear Gear Case Oil Check

1. Place the vehicle on a level surface.
2. Remove the oil filler bolt (1) and check the oil level. The level should be up to the brim of the hole. If the level is low, add sufficient oil to raise it to the specified level.
3. Install the oil filler bolt and tighten it to 18.4 ft-lb. (25 Nm).

Rear Gear Case Oil Change

1. Place vehicle on a level surface.
2. Place an oil pan under the gear case to collect the used oil.
3. Remove the oil drain bolt (2) at the bottom of the gear case and drain the oil.
4. Install the oil drain bolt and tighten it to 18.4 ft-lb. (25 Nm).
5. Fill with gear case oil by 13.5oz (400ml) into the filler hole (1).
6. Install the oil filler bolt and tighten it to 18.4 ft-lb. (25 Nm).

NOTE:

Approximate rear gear case oil capacity: **13.5 oz. (400mL)**

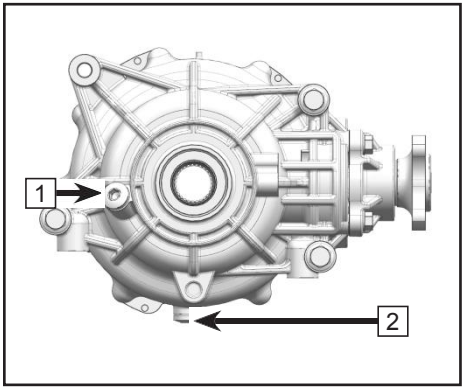

1	Fill bolt	2	Drain plug

Front and Rear Axle Boots

The front and rear axle boots (1) must be checked for holes or wear before operating. If any damage is found, have your dealer repair the vehicle.

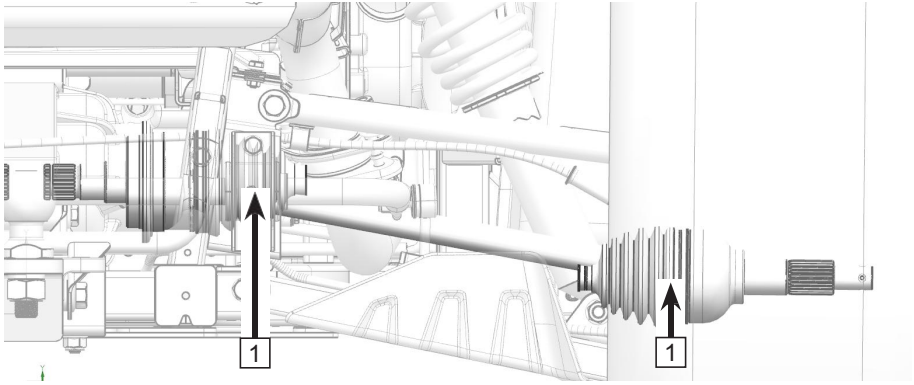

1	Axle boots

What to do if water collects in the CVT housing

If the vehicle was submerged in water deep enough that water has entered the CVT housing, remove the drain bolt (1) at the bottom of the housing to drain the water from the case.

CAUTION
If water drains from the CVT housing after removing the bolt, have your dealer inspect the vehicle, as water may have affected the CVT system and other engine parts.

Drying a Wet CVT System

If the CVT system was submerged and the drive belt is slipping, any remaining moisture inside the CVT housing after draining can be expelled by running the engine above 2000 RPM in Park or Neutral for 30~60 seconds, then testing for proper CVT function in low gear. Repeat as necessary. If the CVT system continues to slip or have poor performance, contact your dealer.

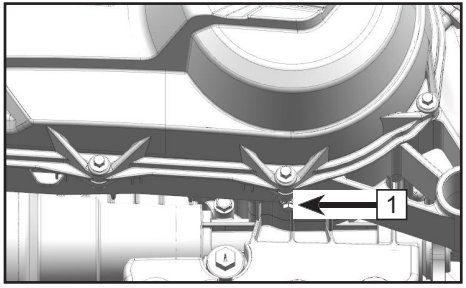

1	Drain bolt, CVT housing

MAINTENANCE

Cooling System

Coolant Level Inspection

1. Place the vehicle on a level surface.
2. Inspect the coolant level in the reservoir.
3. If the coolant is at or below the lower limit mark; remove the access cover and the reservoir cap . Add coolant to the upper limit mark, install the reservoir cap, and then reinstall the access cover.

NOTE:

Check the coolant level in the coolant reservoir when the engine is cold, as the coolant level will vary with engine temperature.

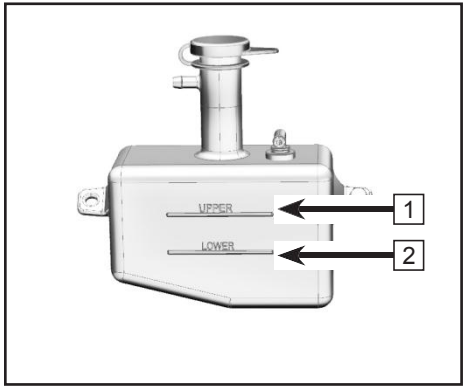

1	UPPER	2	LOWER

CAUTION
If water is added, have your dealer check the antifreeze content of the coolant as soon as possible. Never add hard water or salt water, as it is harmful to the engine. Softened tap water may be used if distilled water is not available. The radiator fan operation is automatically switched on or off according to the coolant temperature in the radiator during operation.

Change the Coolant

⚠CAUTION
After running the engine, never remove the radiator cap immediately. Wait for the engine to cool down before removing the radiator cap. Hot coolant can cause serious burns.

1. Place the vehicle on a level surface.
2. Remove the front access cover.
3. Remove the radiator cap (1) .
4. Remove the coolant reservoir cap (2).
5. Place a container under the engine, and then remove the coolant drain bolt (3).
6. Disconnect the hose from the coolant reservoir, and drain the coolant into a container.
7. After draining the system, thoroughly flush the system with clean tap water. Allow the water to drain completely.
8. Replace the coolant drain bolt washer if it is damaged, then install and tighten the coolant drain bolt, but do not torque to specification.
9. Reinstall the coolant reservoir hose.
10. Fill the recommended coolant into the radiator until it is full.

NOTE:

When filling coolant, at the same time loosen the coolant drain bolt to draw out potential air bubbles inside the coolant hose until coolant flows out, then tighten the drain bolt to 7.3 ft-lb. (10 N•m).

11. Install the radiator cap.

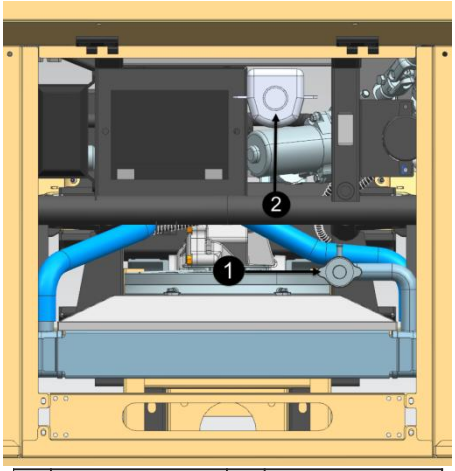

1	Radiator cap	2	Reservoir cap

12. Start the engine and let it idle for several minutes. Stop the engine and allow it to cool. Check the coolant level in the radiator. If it is low, add more coolant until it reaches the top of the radiator. Repeat as necessary.
13. Fill the coolant reservoir with coolant up to the upper limit.
14. Install the coolant reservoir cap and check for coolant leaks. If any leaks are found, have your dealer check the cooling system.
15. Reinstall the front access cover.

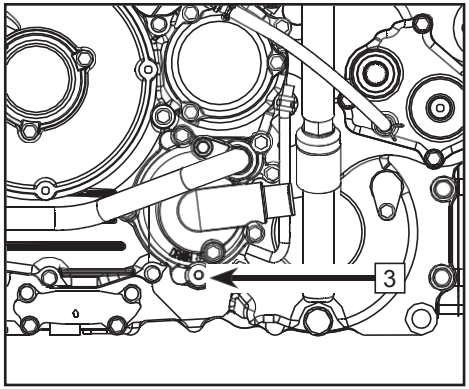

3	Drain Bolt

NOTE:

Recommended antifreeze:

Any high quality ethylene glycol antifreeze containing corrosion inhibitors for aluminum engines.

Antifreeze and water mixing ratio: **1:1**

Coolant capacity: **4.44 qt. (4.2 L)**

Coolant change: **4.33 qt. (4.1 L)**

Coolant reservoir capacity: **0.32 qt~0.62 qt. (300 mL~590 mL)**

Cleaning the Radiator

Cleaning the external surfaces of the radiator if it is covered with mud or debris will ensure it continues to efficiently cool the engine. Use only low pressure water to clean the radiator. High pressure washers can damage components. Ensure that water can flow can flow freely through the radiator fins. This is a sign that cooling air will be allowed to pass through.

MAINTENANCE

Spark plug(s)

The spark plug (1) is an important engine component that is easy to inspect. The color and condition of the spark plug can indicate the condition of the engine. The ideal color on the insulator around the center electrode is a medium-to-light tan color for an engine that is being operated normally. If electrode erosion becomes excessive, or if carbon and other deposits are excessive, you should replace the spark plug with the specified plug.

Periodically remove and inspect the spark plug(s) for heat damage and deposits that will cause them to break down and erode. Do not attempt to diagnose spark plug color or engine problems yourself. Instead, take the vehicle to your dealer for service.

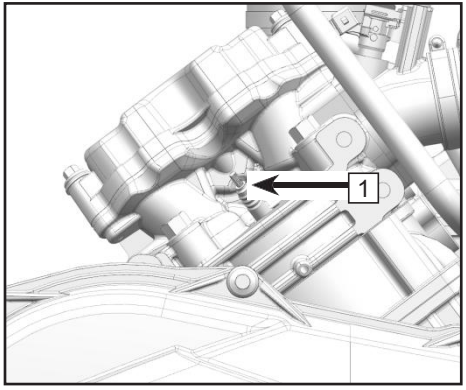

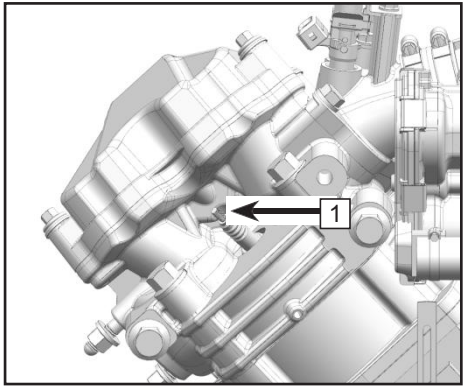

MAINTENANCE

Spark Plug Removal and Inspection

1. Tilt the cargo box.
2. Clean any dirt or debris from the spark plug and cylinder area.
3. Remove the spark plug cap.
4. Use the spark plug socket and wrench from the tool kit to remove the spark plug.
5. Check the spark plug gap (A) using a thickness gauge. Adjust the gap if necessary.

NOTE:

Specified spark plug: **DCPR8E (NGK)**

Spark plug gap: **.031 in~.035 in (0.8 mm~0.9 mm)**

6. Clean the gasket surface. Wipe off any grime from the threads.
7. Install spark plug and tighten to specified torque.

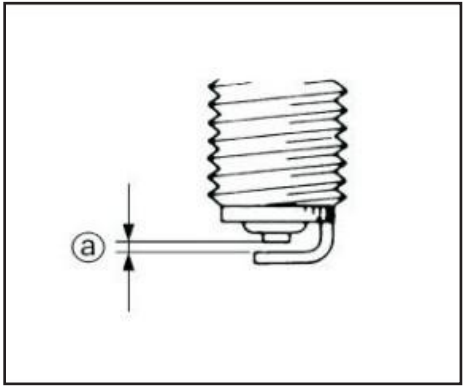

NOTE:

Spark plug torque: **14.8 ft-lb. (20 N•m)**. If a torque wrench is not available when you are installing a spark plug, a good estimation of the correct torque is that, tight the spark plug by finger first, then use tool to tight from 1/4 to 1/2 position.

8. Install the spark plug cap.
9. Install the cargo box access panel. Torque the fasteners to **7.3 ft-lb. (10 N•m)**.

Spark plug removal to expel water from the engine

If water has been ingested into the engine, it is important to remove the water as soon as possible by removing the spark plug(s) and using the starter system to rotate the engine for a short period to expel water out of the cylinder(s). Verify that the air box has been drained of water before attempting to expel water. Have a dealer service the engine immediately.

CAUTION
Major engine damage can result in the vehicle if water is ingested into the engine. Have the vehicle serviced by your dealer promptly if your vehicle becomes immersed or stalls in water that exceeds the footrest level. It is important to contact your dealer for service before starting the engine if water has been ingested. Water inside the engine can cause a 'hydraulic lock' effect that can damage the starter and engine components. The engine oil should be checked for water contamination. Drain and refill with new engine oil if water is found in the crankcase.

Exhaust Spark Arrestor

Clean carbon deposits from the spark arrester periodically while the muffler and exhaust are at normal air temperature.

⚠ CAUTION

Ensure that the exhaust pipe and muffler are fully cooled down before servicing the spark arrestor.

1. Remove the fasteners (1).
2. Tap the tailpipe lightly to loosen it and remove the spark arrester from the muffler.
3. Use a wire brush to remove any carbon deposits from the spark arrester portion of the tailpipe (2).
4. Insert the tailpipe into the muffler and align the bolt holes.
5. Install and torque the fasteners to **7.3 ft-lb. (10 N•m).**

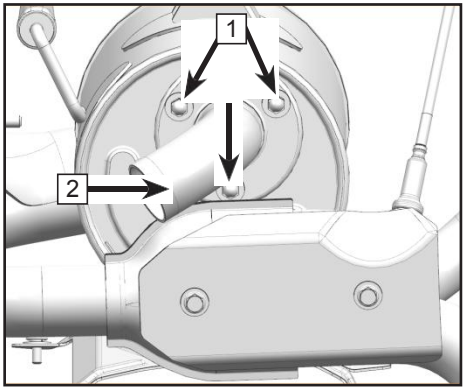

Battery

This vehicle is equipped with a 12 volt/30 Amp-hour, sealed low-maintenance battery (A), which is located at under the middle hood . Therefore, it is not necessary to check the electrolyte or add distilled water to the battery. If the battery seems to have discharged, consult your dealer. Verify that the battery connections are clean and secured during routine maintenance.

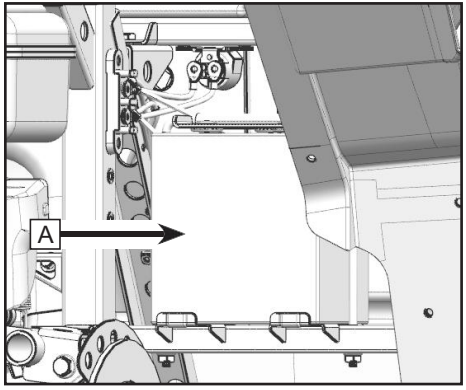

MAINTENANCE

Battery Maintenance Guidelines:

- A special battery charger (constant low voltage/ampere) is required for recharging low-maintenance batteries. Using a conventional battery charger may shorten the battery life.
- If the vehicle will not be used for a month or longer, remove the battery and store it in a cool, dry place. Completely recharge the battery before re-installation.
- Always make sure the cable connections are the correct polarity when reinstalling the battery. RED ('+' positive) / Black ('–' negative). Always disconnect the RED ('+'positive) cable last during removal, and reconnect it first during installation.
- Corroded battery connections can be cleaned with a mixture of baking soda and water.

⚠ WARNING
Avoid contact with skin, eyes or clothing, and always shield eyes when working near batteries. Keep out of reach of children. Keep batteries away from sparks, flames, cigarettes or other sources of ignition. Ventilate the area when charging or using in a closed space. **Battery acid antidote:** **EXTERNAL: Flush with water.** **INTERNAL: Get prompt medical attention.** **EYES: Flush with water for 15 minutes and get prompt medical attention.**

Brakes

Brake Fluid Level Inspection

Before riding, check that the brake fluid level is above the low mark and replenish whenever necessary. Brake fluid reservoir is located under the hood. Insufficient brake fluid may let air enter the brake system, possibly causing the brakes to become ineffective.

Observe These Precautions:

- When checking the fluid level, make sure the vehicle is on a level surface.
- Use only the designated quality brake fluid. Otherwise, the rubber seals may deteriorate, causing leaks and poor brake performance.
- Recommended brake fluid: DOT 4.
- Refill with the same type of brake fluid. Mixing fluids may result in a harmful chemical reaction and may lead to poor brake performance.
- Be careful that water does not enter the master cylinder reservoir. Water will significantly lower the boiling point of the fluid and lead to poor brake performance.
- Brake fluid may deteriorate painted surfaces or plastic parts. Always clean up spilled fluid immediately.
- As the brake pads wear, it is normal for the brake fluid level to gradually go down. A low brake fluid level may indicate worn

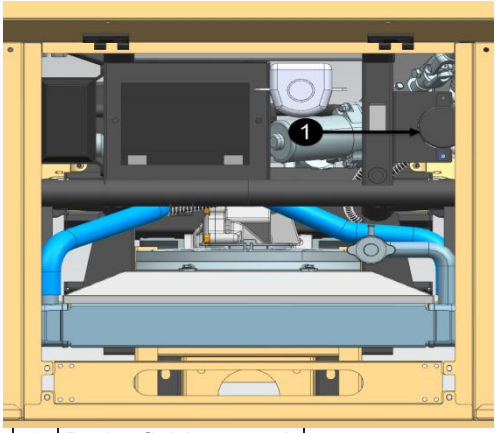

1	Brake fluid reservoir

brake pads or brake system leakage. Therefore, be sure to check the brake pads for wear before checking the brake system for leakage.

- Have your dealer check the cause if the brake fluid level goes down unexpectedly.

Brake Pad Inspection

Inspect the front and rear brake pads and discs for damage and wear. If the pad thickness (A) is less than 059 in. (1.5mm) or the disc thickness (B) is less than .118 in. (3.0mm), have your dealer replace them. Replacement of brake components requires professional knowledge. These procedures should be performed by your dealer.

NOTE:

Wheels must be removed to check brake pads.

⚠ CAUTION
After servicing: • Make sure the brakes operate smoothly and that the lever free play is correct. • Make sure the brakes do not drag and the brake operation is not spongy. • All air is bled from the brake system.

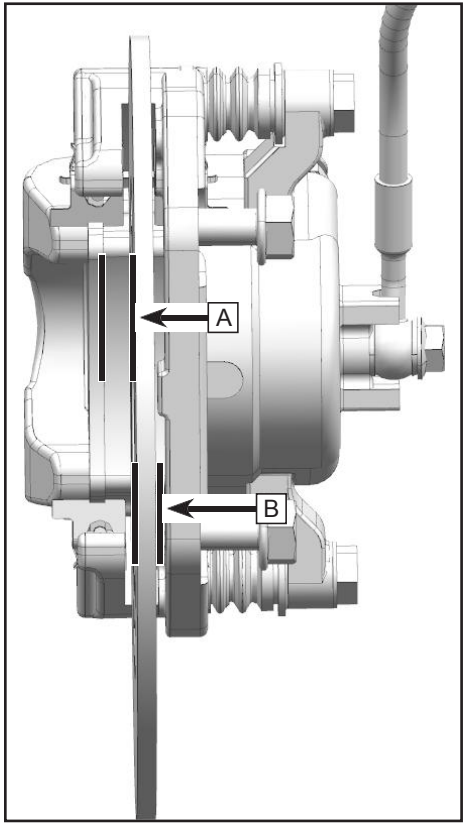

Brake Fluid Change

Complete brake system fluid replacement should be performed only by trained service personnel. Have your dealer replace the following components during periodic maintenance, or when they are damaged or leaking:

- Replace the brake hoses every four (4) years.

Brake Light Switch Operation

The brake light switch is activated by foot brake pedal pressure, and is properly working when the brake light comes on just as braking takes effect. Check that the switch assembly or the electrical circuit is working properly in case of brake light failure.

Suspension

Some front suspension components of the vehicle do not require maintenance or lubrication. Ensure these components are cleaned regularly, and are not loose or damaged before operating the vehicle.

Pivot Lubrication

Lubricate the upper and lower pivots of the front and rear suspension:

- Add grease into the upper and lower pivot grease nipples (1) located at the frame with a grease gun until grease lightly flows from the bushing.

Rear Hub Carrier Lubrication

Lubricate the upper and lower pivots of the rear hub carrier:

- Remove the rear wheels.
- Add grease into the hub carrier upper and lower pivot grease nipples (2) with a grease gun until grease lightly flows from the bushing.
- Reinstall the rear wheels. Torque the fasteners to specification.

NOTE:

Recommended lubricant: All Season Grease

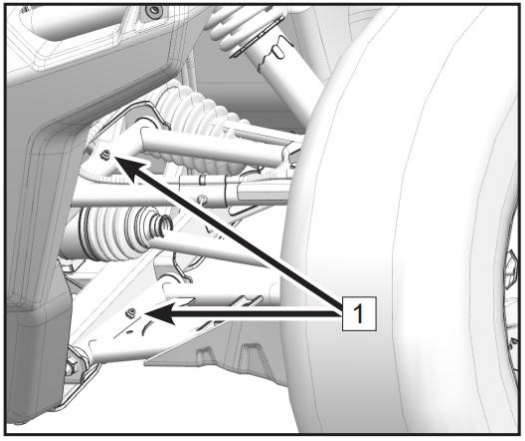

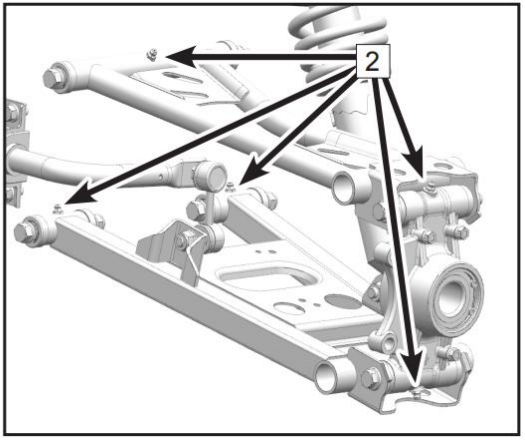

Shock Preload Adjustment

The front and rear shock spring preload and damping can be adjusted to for rider weight, cargo, and riding conditions. Always adjust the shock absorbers on the left and right side to the same setting, and reset them to the initial setting after carrying loads.

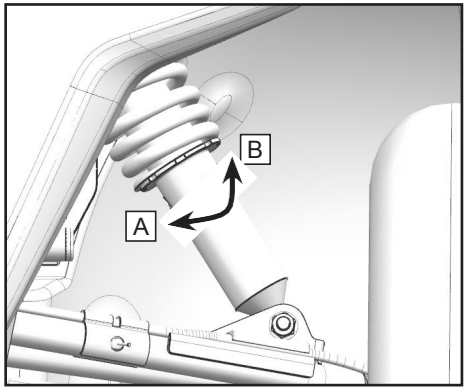

Adjust the spring preload:

A = Soft ~ B = Hard

●To increase the spring preload, loosen the lock nut and turn the adjusting ring in direction 'B'.

●To decrease the spring preload, loosen the lock nut and turn the adjusting ring in direction 'A'.

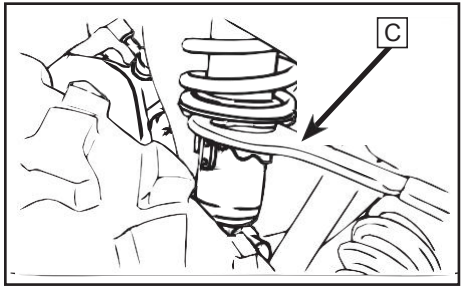

NOTE:

A special collar wrench 'C' is included in the tool kit to make spring preload adjustments.

MAINTENANCE

Wheels

Tire Pressure

Inspect the tire pressure before operation:

Front: **14 PSI (97 kPa)**

Rear: **18 PSI (124 kPa)**

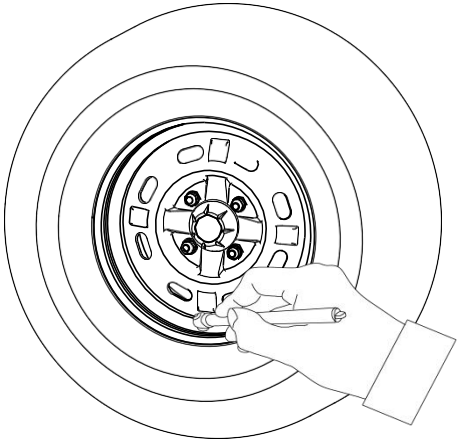

Tread Depth

Inspect the tread depth regularly and replace the tires if the minimum tread depth is less than:

Minimum tread depth: **3/32 in. (3.0mm)**

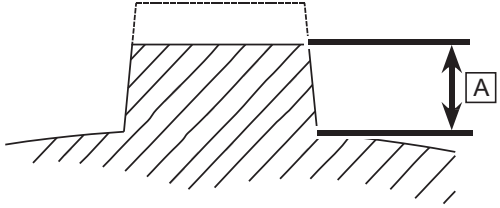

Wheel Bearings

- Lift the vehicle and support it securely under the frame with the tires off the ground.
- Push and pull the wheels at the outer edges to feel for side play or looseness. See your dealer if there is any side play or looseness.

MAINTENANCE

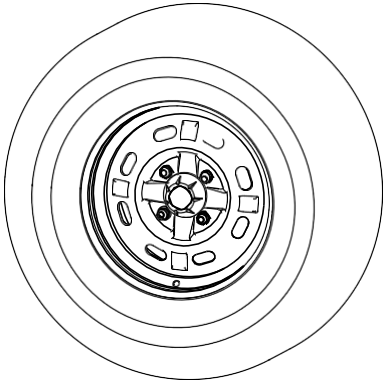

Wheel Removal

- Ensure vehicle is in park.
- Loosen the wheel fasteners.
- Elevate the vehicle and place a suitable support stand under the frame.
- Remove the fasteners from the wheel.
- Remove the wheel.

Wheel Installation

- Ensure vehicle is in park.
- Install the wheel.
- Install the wheel fasteners hand tight.
- Elevate the vehicle, remove the support stand under the frame, and lower the vehicle to the ground.
- Torque the wheel fasteners to specification:

◦Aluminum or Steel wheels - **81 ft-lb~88 ft-lb. (110 N•m~120 N•m)**

NOTE:

If aluminum wheels are used with tapered fasteners, install the fastener with the tapered side facing the wheel.

MAINTENANCE

Electrical

Fuses

The fuse box is located under the front access cover. If a fuse is blown, turn off the main switch and install a new fuse of the specified amperage. Turn on the main switch. If the fuse immediately blows again, contact your dealer.

⚠ CAUTION
To prevent an accidental short-circuit, turn off the main switch before checking or replacing fuses. Always use a fuse with the correct specified rating. Never use conductive material in place of the proper fuse. Using an improper fuse can cause damage to the electrical system and may lead to a fire.

Ref	FUSE	RATING
F1	EPS	40A
F2	EFI	40A
F3	Radiator and Fuel pump	30A
F4	Brake and USB power	15A
F5	Electric Dump Bed	15A
F6	Lights and Horn	15A

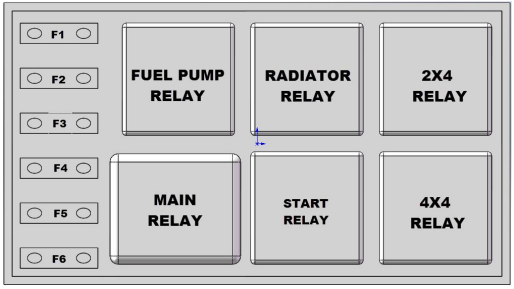

MAINTENANCE

Main Fuse and EPS Fuse

A 40 Amp main fuse and a 40 Amp EPS fuse are located to the left of the battery If the fuse is blown, turn off the main switch and install a new fuse of the specified amperage. Turn on the main switch. If the fuse immediately blows again, contact your dealer.

Relays

Electrical relays help operate the various vehicle system functions vehicle, and are located under the front access cover. They are located on the front access panel. For relay replacement or diagnosis, contact your dealer.

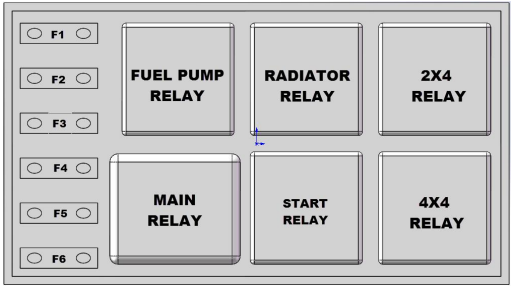

Relay Control Functions:

Main relay	Start relay
Radiator relay	Fuel pump relay
2x4 relay	4x4 relay

Head Light Adjustment

To adjust the head lights:

- Turn screws to adjust the high beam direction beam vertically and horizontally.
- Turn screw to adjust the low beam vertically.

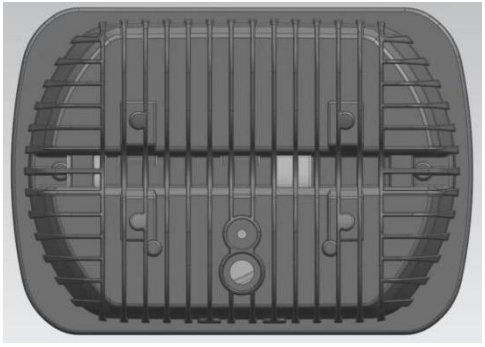

⚠ WARNING
It is advisable to have your dealer perform headlight adjustments. Improper adjustment could lead to an accident resulting in serious injury or death.

NOTE: The headlight and taillight assemblies are an LED structure which cannot be repaired if damaged or failed. Have your dealer replace the entire assembly if an LED is damaged or has failed.

Tail/Brake, Position, and Turn Signal Lamp Replacement

Brake/tail lights, front position lights, and turn signals (if equipped) are LED type. Have your dealer replace the entire assembly if an LED is damaged or has failed.

Fuel Evaporation System (EVAP)

Your vehicle contains a fuel evaporation system (EVAP) that prevents fuel vapors from entering the atmosphere from the fuel tank and fuel system. Never modify any part of this system, which will violate fuel evaporation emission regulations.

During routine maintenance, visually inspect all connections for leaks and blockage, and inspect the hoses for kinks or damage.

No other maintenance is necessary. Contact your dealer if repair is required.

NOTE: Information applies only to vehicles equipped with a fuel evaporation system.

Cleaning and Storage

Washing the Vehicle

Keeping your vehicle clean will not only improve its appearance, but it can also extend the life of various components. With a few precautions, your vehicle can be cleaned much like an automobile:

- The best and safest way to clean your vehicle is with a garden hose and a pail of mild soap and water. Harsh detergents may deteriorate rubber components.
- Use a professional type washing mitten, cleaning the upper body first and the lower parts last.
- Pay special attention that the cooling system radiator and axle boots are thoroughly cleaned of all dirt and debris.
- Rinse with water frequently and dry the vehicle with a chamois to prevent water spots.
- Lubricate all pivot points immediately after washing.
- Allow the engine to run for a while to evaporate any water that may have entered the engine air intake or exhaust system.

BMSMOTOR does not recommend the use of a high pressure type car wash system for washing your vehicle, as water can be forced past seals and damage decals. If a high pressure system is used, exercise extreme care to avoid water damage to the decals, wheel bearings, transmission seals, body panels, brakes, warning labels, air filter intake system and electrical system. Ensure water is not allowed to enter into the air filter or CVT housing. If warning and safety labels are damaged, contact your dealer for a replacement.

Waxing the Vehicle

Your vehicle can be waxed with any non-abrasive automotive paste wax. Avoid the use of harsh cleaners since they can scratch the body finish.

CLEANING AND STORAGE

CAUTION
Certain products, including insect repellants and other chemicals, will damage plastic surfaces. Use caution when using these products near plastic surfaces.

Perform Repairs

Make necessary repairs to your vehicle before storing to prevent further damage the next time you operate it.

Check the Tires

Inspect the tire treads and overall condition. Set the tires to the specified air pressure.

Oil and Filter

Warm the engine, then stop the engine and change the oil and filter.

Air filter/ Air box

Inspect and clean or replace air filter. Clean the air box and the sediment tube.

Check Fluid Levels

Inspect the following fluid levels and change if necessary:

- Front gear case
- Rear gear case
- Brake fluid (change every two years or as required if fluid looks dark or contaminated)
- Coolant (change every two years or as required if coolant looks contaminated)
- Fuel Level (add fuel stabilizer according to the product label directions)

CLEANING AND STORAGE

Stabilize the Fuel

Fill the fuel tank with fresh fuel that has been treated with fuel stabilizer according to the product label directions. Do not allow untreated fuel to remain in the tank longer than 30 days, as the fuel begins to degrade and can cause damage to the fuel system components.

Battery Storage

- Remove the battery from the vehicle and ensure that it is fully charged before placing it in storage. Protect the battery from freezing temperatures, which can damage the battery.

Lubricate

Inspect all cables and lubricate with cable lubricant according to the product label directions. Grease the vehicle lubricating points with all season grease.

'Fog' the Engine

- Tilt the cargo box to access the spark plug(s).
- Remove the spark plug(s), rotate the piston to the bottom of its stroke, and pour approximately 2.0 oz. (15mL~20mL) of engine oil into the opening.

NOTE:

Do this carefully! If you miss the spark plug hole, oil will drain from the spark plug cavity, and appear to be an oil leak. To access the spark plug hole, use a section of clean hose and a small plastic squeeze bottle filled with the pre-measured amount of oil.

- Reinstall the spark plug(s). Torque the spark plug to specification.
- Turn engine over several times slowly. Oil will be forced in and around the piston, piston rings and the cylinder will be coated with a protective film of fresh oil.

- Reinstall the spark plug(s), cap(s), and side panel.

NOTE:

Starting the engine during the storage period will disturb the protective film created by fogging. Corrosion could occur. Never start the engine during the storage period.

Storage Area And Covering

Support the vehicle with stands under the frame with the tires 30mm~40mm (1/2in) off the ground. Be sure the storage area is well ventilated, and cover the machine with an approved cover.

NOTE:

Do not use covers made of plastic or coated materials. They do not allow enough ventilation to prevent condensation, and may promote corrosion and oxidation.

CLEANING AND STORAGE

Transporting the Vehicle

Follow these procedures when transporting the vehicle:

- Turn off the engine and remove the key to prevent loss during transporting.
- Ensure the fuel cap is installed correctly and secure.
- Ensure the seat is installed correctly and secure.
- Place the gear into any position except the parking position, and block the front and rear wheels to prevent the vehicle from moving.

CAUTION
Never transport with the gear selector in the parking position. **Damage to the engine and transmission may result.**

- Secure both the front and rear of the vehicle frame to the transport to prevent the vehicle from sliding or moving.

VEHICLE ISSUE DIAGNOSIS

Vehicle Issue Diagnosis

This section is intended to guide an average owner to simple items that could cause operating problems. Diagnosis of vehicle issues may require the experience of a dealership technician. Please contact your dealer if a solution is not apparent.

Engine doesn't turn over

Possible Cause	Solution
Blown fuse	Reset or replace the fuse
Low battery voltage	Recharge battery to 12.8 Vdc – Confirm battery state of health
Loose battery connections	Check all connections and tighten if necessary
Loose starter system electrical connections	Check all connections and tighten if necessary
Engine stop switch	Check function
Start circuit not complete – transmission in gear	Press foot brake or shift transmission to neutral or parking position.

Engine pings or knocks

Possible Cause	Solution
Poor quality or low octane fuel	Replace with minimum 89 octane unleaded fuel
Incorrect ignition timing.	See your dealer
Incorrect spark plug gap or heat range	Set spark plug gap to specs or replace plugs

VEHICLE ISSUE DIAGNOSIS

Engine stops or loses power

Possible Cause	Solution
Overheated engine	Clean radiator screen and external core; clean engine exterior; See your dealer
Out of fuel	Refuel with minimum 89 octane unleaded fuel
Kinked or plugged fuel tank vent line	Inspect and replace; See your dealer
Water present in fuel	Replace with new fuel
Fouled or defective spark plugs	Inspect and clean or replace spark plug
Worn or defective spark plug wires	See your dealer
Incorrect spark plug gap or heat range	Set gap to specs or replace plug

VEHICLE ISSUE DIAGNOSIS

Loose ignition connections	Check all connections and tighten
Low battery voltage	Recharge battery to 12.8 Vdc; check charging system – Confirm battery health
Clogged air filter	Inspect and replace as necessary
Reverse speed limiter malfunction	See your dealer
Electronic throttle control malfunction	See your dealer
Other mechanical failure	See your dealer

VEHICLE ISSUE DIAGNOSIS

Engine turns over, Fails to start

Possible Cause	**Solution**
Engine turns over, Fails to start	Refuel
Clogged fuel filter	Inspect and replace as necessary
Water is present in fuel	Replace with 89 minimum octane unleaded fuel
Fuel pump is inoperative	Inspect pump and fuse; Replace as necessary
Old or non-recommended fuel	Replace with 89 minimum octane unleaded fuel
Possible Cause	Solution
Fouled or defective spark plugs	Inspect spark plugs, replace if necessary
No spark to spark plug	Inspect spark plugs, verify stop switch is on
Crankcase filled with water or fuel	Immediately see your dealer
Clogged air filter	Inspect and replace as necessary; Replace spark plugs as necessary
Clogged fuel injector	See your dealer
Low battery voltage	Recharge battery to 12.8 Vdc – Confirm battery health
Mechanical failure	See your dealer

VEHICLE ISSUE DIAGNOSIS

Engine backfires

Possible Cause	Solution
Weak spark from spark plugs	Inspect and replace spark plugs as necessary
Incorrect spark plug gap or heat range	Set gap to specs or replace plugs
Old or non-recommended fuel	Replace with minimum 89 octane unleaded fuel
Incorrectly installed spark plug wires	See your dealer
Incorrect ignition timing	See your dealer
Mechanical failure	See your dealer
Speed limiter malfunction	See your dealer

Engine turns over, Fails to start

Possible Cause	Solution
Fouled or defective spark plugs	Inspect and replace spark plugs as necessary
Worn or defective spark plug wires	See your dealer
Incorrect spark plug gap or heat range	Set gap to specs or replace plugs
Loose electrical connections	Check all connections and tighten
Water present in fuel	Replace with new fuel
Low battery voltage	Recharge battery to 12.5 Vdc; Check charging system
Kinked or plugged fuel tank vent line	Inspect and replace
Incorrect fuel	Replace with 89 minimum octane unleaded fuel
Clogged air filter	Inspect and replace as necessary; Replace spark plugs as necessary
Reverse speed limiter malfunction	See your dealer
Electronic throttle control malfunction	See your dealer

VEHICLE ISSUE DIAGNOSIS

Possible Cause	Solution
Other mechanical failure	See your dealer
Possible Lean or Rich fuel mixture	See your dealer
Low or contaminated fuel	Add or change fuel, clean the fuel system
Low octane fuel	Replace with minimum 89 octane unleaded fuel
Clogged fuel filter	Replace filter
Fuel is very high octane	Replace with minimum 89 octane unleaded fuel

VEHICLE ISSUE DIAGNOSIS

EFI Malfunction Indicator Light

The Electronic Fuel Injection system on your vehicle contains a self-diagnostic feature that will illuminate the malfunction indicator light (MIL) if it detects a problem. When this indicator flashes, please contact your dealer. In normal operation, the EFI indicator will be off.

Each trouble code consists of 4 digits, denoted by the short flash of the EFI MIL indicator with a 1 second interval between digits. If there is a failure, the EPS indicator will start to flash. Check the flash sequence of EFI indicator. Write down the flash sequence and contact your dealer for diagnosis. Your dealer has the special tool required to diagnose, repair and clear trouble codes. Any codes will disappear once the problem has been diagnosed and repaired by your dealer.

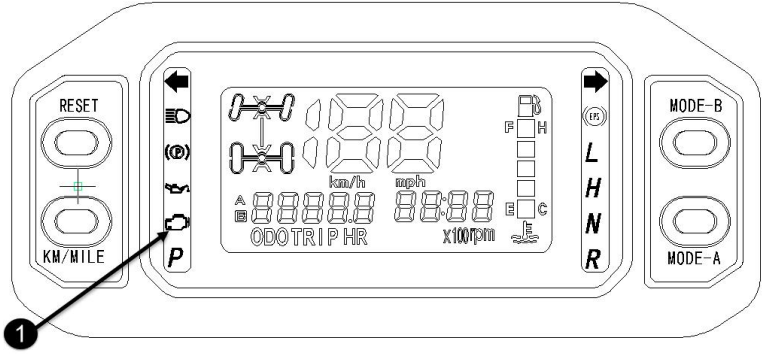

1	EFI Indicator

EFI Malfunction Indicator

Example - CODE ‘0650’:

‘0’ - light flashes 10 times

‘6’ - light flashes 6 times

‘5’ - light flashes 5 times

‘0’ - light flashes 10 times

Flash interval: 1 sec.

The flash cycle will repeat after EFI MIL indicator light turns off for 3 seconds. If there are multiple codes detected, the system will wait approximately 3 seconds and display the next code.

Stop operating the vehicle and contact your dealer immediately if the EFI system MIL is flashing.

VEHICLE ISSUE DIAGNOSIS

EPS Malfunction Indicator Light

The Electronic Power Steering system on your vehicle contains a self-diagnostic feature that will illuminate the malfunction indicator light (MIL) if it detects a problem,when this indicator flashes, please contact your dealer. In normal operation, the EPS indicator will be on after the ignition switch is turned to ON, but EPS will not work. When the engine is started, the EPS indicator will be off and the EPS starts to function.

Each trouble code consists of 2 digits, denoted by the times of long flash and short flash of EPS MIL indicator. If there is a failure, the EPS indicator will start to flash. Do NOT switch off the machine. Check the flash sequence of EPS indicator. Write down the flash sequence and contact your dealer for diagnosis. Your dealer has the special tool required to diagnose, repair and clear trouble codes. Any codes will disappear once the problem has been diagnosed and repaired by your dealer.

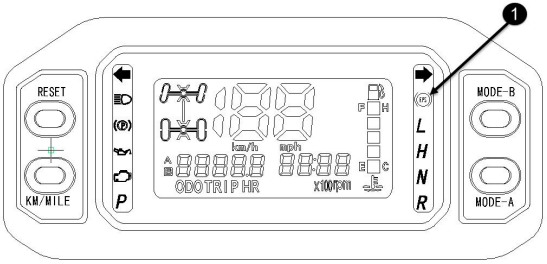

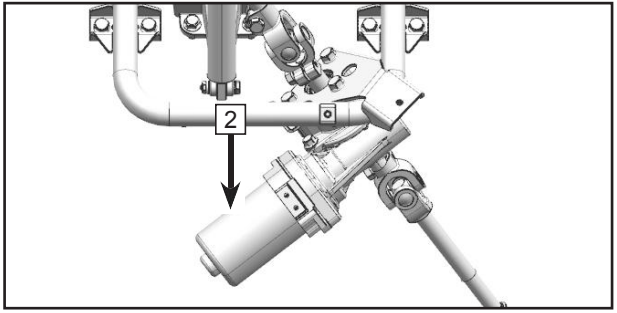

1	EPS Indicator

2	EPS Assembly

EPS Malfunction Indicator

Times of long flash represent the tens digit;

Times of short flash represent the single digit;

Duration of long flash: 2 sec.

Duration of short flash: 1 sec.

Flash interval: 1 sec.

The flash cycle will repeat after EPS MIL indicator light turns off for 3 seconds

Stop operating the vehicle and contact your dealer immediately if the EPS system MIL is flashing or there is a loss of steering assist with the engine running.

VEHICLE ISSUE DIAGNOSIS

Electronic Power Steering (EPS) Fault Diagnosis and Solution

Steering without assistance	1. Wire connectors have bad contact or are disconnected 2. The fuse blew out 3. Relay damage 4. The controller, motor, or sensor is damaged	1. Check whether wire connectors and pins are fully inserted 2. Replace the fuse (40A) 3. Contact your dealer 4. Contact your dealer
Power assist doesn't weigh the same for left and right	1. The median output voltage has deviation 2. Controller, motor or sensor is damaged	1. Contact your dealer 2. Contact your dealer
When system is 'ON', the steering swings to both sides	1. Motor is mounted backwards 2. Controller or sensor is damaged	1. Contact your dealer 2. Contact your dealer
Steering becomes heavy	1. Battery has power loss 2. Air pressure of the tires (front) is insufficient 3. Motor damage (power reduction)	1. Charge the battery 2. Inflate the tires 3. Contact your dealer
System has noise	1. Motor damage 2. Gap of lower steering shaft assembly or mechanical steering assembly is too large 3. Installation of lower steering shaft assembly or mechanical steering assembly is loose	1. Contact your dealer 2. Contact your dealer 3. Contact your dealer